DOMUSA TEKNIK

FUSION HYBRID GAS CONDENS R

HYBRIDIZATION MODULE

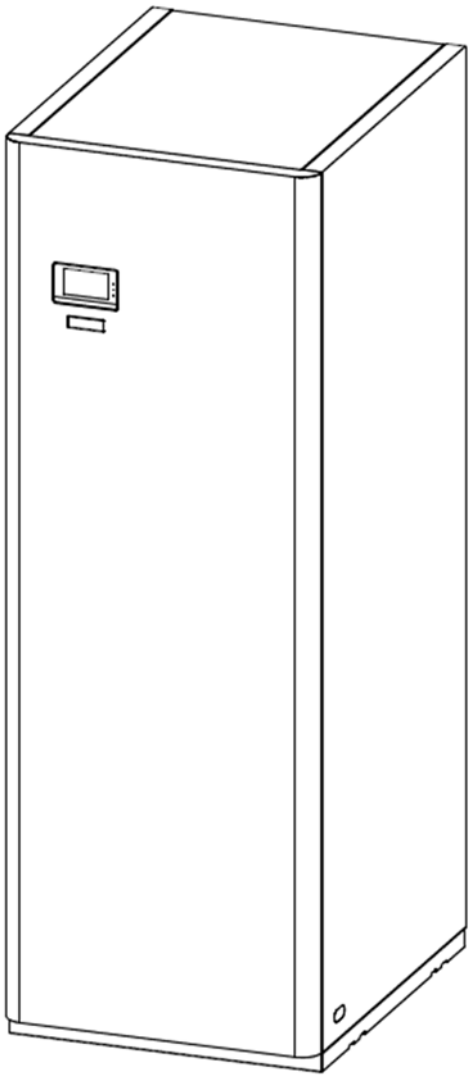

Applus ISO 9001 EC-8890/17 Systems Certification

Applus ISO 14001 MA-3661/17 Systems Certification

EN | INSTALLATION AND OPERATING INSTRUCTIONS

Thank you for choosing a **DOMUSA TEKNIK** heating boiler. You have chosen the **Fusion Hybrid Gas Condens R** model from the **DOMUSA TEKNIK** product line. With a suitable hydraulic installation, this gas-fired module will provide the ideal level of comfort for your home. You will also be able to enjoy a balanced, economical supply of domestic hot water.

This document constitutes an essential part of the product and must be delivered to the end user. Please carefully read the warnings and advice contained in this manual, as they provide important information regarding the safety of the installation, as well as use and maintenance.

These boilers must be installed by qualified personnel only, in accordance with the legislation in force and following the manufacturer's instructions.

Start-up of these boilers and any maintenance operations must only be carried out by **DOMUSA TEKNIK**'s Authorised Technical Assistance Services.

This device can be used by children aged 8 years and above and people with reduced physical, sensory or mental abilities or without experience and knowledge, provided that they have been given appropriate supervision or training regarding the use of the device in a safe manner and that they understand the dangers involved. Children should not play with the device. Cleaning and maintenance should be carried out by the user should not be carried out by children without supervision.

Incorrect installation of these boilers could result in damage to people, animals or property, and the manufacturer will hold no liability in such cases.

DOMUSA TEKNIK, in compliance with item 1 of the first additional provision of Act 11/1997, hereby informs that the person in charge of delivering the container waste or used container, for its correct environmental management, will be the final holder of the product (Article 18.1 of Royal Decree 782/1998). At the end of its useful life, the product must be taken to a selected collection point for electrical and electronic equipment or must be returned to the distributor at the time of purchasing a new equivalent appliance. For more detailed information on the collection diagrams available, please contact either the collection facilities of the local authority or the distributor where the purchase was made.

INDEX

1 SAFETY WARNING

1.1 Safety symbols

All safety messages indicate a potential risk of breakdown or damage. Follow the instructions carefully to prevent accident or damage.

DANGER

This symbol warns of operations or situations involving imminent danger and which could cause severe damage or even death if they are not avoided.

WARNING

This symbol is for warnings that must be taken into account for correct use of the appliance and to prevent malfunctioning that could give rise to hazardous situations for the appliance itself and for persons.

CAUTION

This symbol warns of operations or situations involving imminent danger which could cause slight or moderate damage if they are not avoided.

1.2 Other symbols

The following symbols are used in the instructions to draw your attention to important information.

Atención **Indica el riesgo de averías y daños a bienes o personas.**

Nota **Indica importante información adicional que puede estar relacionada con el correcto funcionamiento de del módulo.**

1.3 Safety warnings

DANGER

A gas leak could give rise to explosion with serious consequences, causing material and personal damage. If you smell gas:

Do not smoke in the hazard area. Do not light any flames or sparks.

Do not turn on any switches or electrical appliances.

Open doors and windows.

Turn off the main gas valve and switch off the heating.

Keep all persons away from the hazard area.

Follow the safety instructions provided by your gas supplier. These are posted beside the gas meter. Notify your gas supplier.

DANGER

Breathing in combustion gases (flue gases) can cause serious damage to health by poisoning.

Switch off the heating.

Ventilate the room.

Close all doors to prevent the gas from reaching other rooms.

Do not switch on any switches or electrical appliances.

CAUTION

While working on the heating system

Make sure the module has been disconnected from the mains supply. To do this, you may separate or remove the fuses or cut off the mains supply, firstly checking that the module is not still switched on.

Cut off the gas flow and make sure it is not restored until you give authorisation.

For propane boilers

Before installing the boiler, you must be sure that the gas tank has been drained. As a rule, the propane supplier is responsible for suitably draining the air from the tank. You may have problems switching on the boiler if the tank has not been suitably drained. In such cases, firstly contact the person responsible for filling the tank.

1.4 General installation guidelines

DOMUSA TEKNIK ensures that this product contains no harmful substances and that no harmful materials have been used in its manufacture.

Please carefully read this instruction manual and keep it in a safe, easily-accessible place. **DOMUSA TEKNIK** shall not be held liable for any damage that may occur due to failure to follow these instructions.

The **Fusion Hybrid Gas Condens R** module can only be installed in combination with a heat pump from the **DUAL CLIMA R** line from **DOMUSA TEKNIK**. The **FUSION** module, in combination with a **DUAL CLIMA R** heat pump, is suitable for use in both heating and cooling installations, and can be combined with fan coils, underfloor heating/cooling and low-temperature radiators. It should be connected to a heating/cooling system and to a hot water distribution network that is compatible with its performance and power.

This appliance should only be used for the purpose for which it has been expressly designed. Any other use is considered unsuitable and therefore hazardous. The manufacturer shall not be considered liable under any circumstances for damage caused by unsuitable, erroneous or improper use.

Improper installation or placement of equipment or accessories may cause electrocution, short circuit, leakage, fire, or other damage to the equipment. Use only accessories or optional equipment manufactured by **DOMUSA TEKNIK** and specifically designed to work with the products presented in this manual. Do not modify, replace or disconnect any safety or control device without first consulting the manufacturer or the Official Technical Assistance Service of **DOMUSA TEKNIK**.

Current legislation must be taken into account on installing this appliance, and it must be installed in a place with suitable ventilation.

The module must be installed by an installer authorised by the Ministry of Industry and it must be started up by an Official Technical Assistance Service authorised by **DOMUSA TEKNIK**.

The module must be installed considering the requirements demanded at each installation site:

- The Gas Installation Regulation.
- The Technical Building Code.
- The Regulation for Heating Installations in Buildings.
- The Low Voltage Regulation.
- The Codes of good practice and regulations refer to the latest versions of the same.

2 LIST OF COMPONENTS

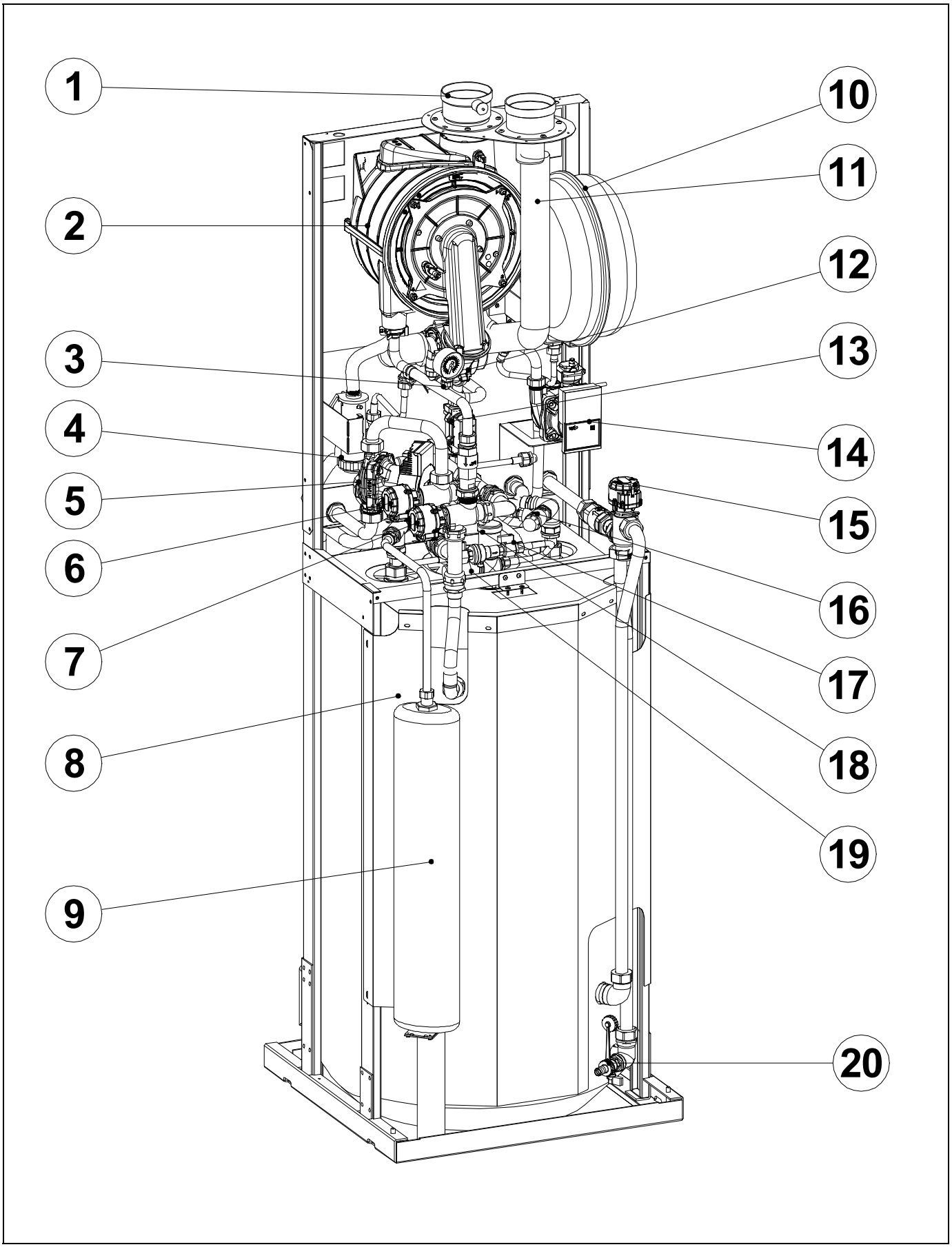

1. Flue gas outlet.

2. Combustion chamber.

3. Primary manometer.

4. Condensate siphon.

5. Backup pump.

6. 3 way valve (G2).

7. 3 way valve (E1).

8. Stainless Steel DHW tank.

9. DHW expansion vessel.

10. Heating expansion vessel.

11. Air inlet.

12. Fan.

13. Gas valve.

14. Pump.

15. 3 way valve (G2´).

16. DHW safety valve.

17. Filling disconnector.

18. Drain valve.

19. Safety valve.

20. Primary drain valve.

3 CONTROL COMPONENTS

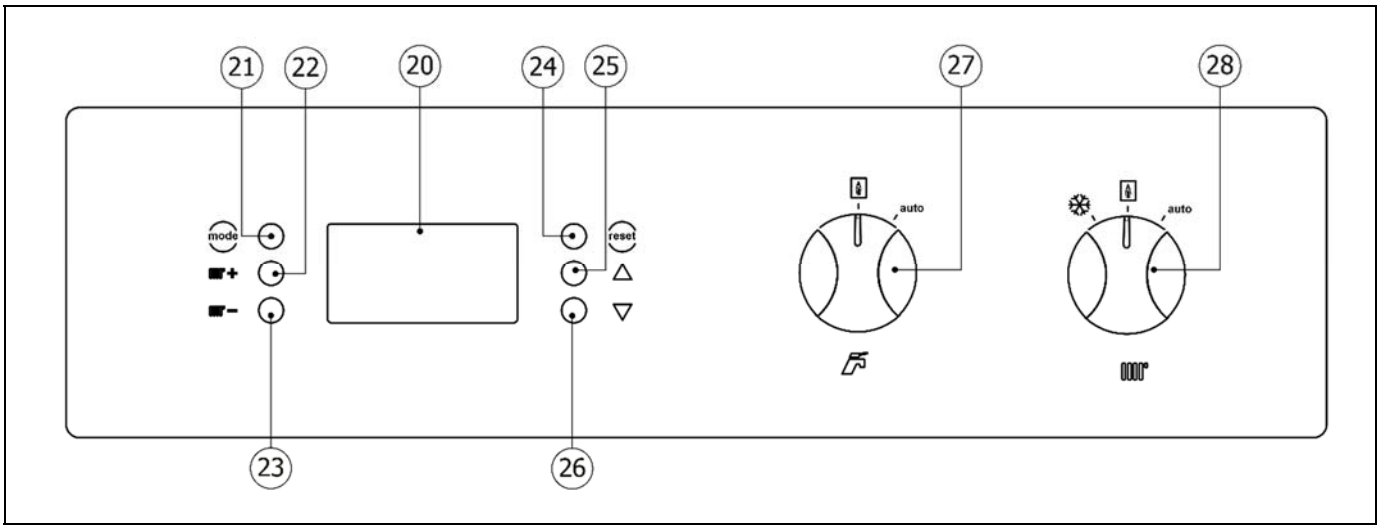

20. Digital display

This is the main boiler functioning display, on which all the operating information, settings and values appear.

21. MODE button

This button selects between the different operating modes. It is also used to disable the hot water function.

22. Button for increasing the boiler temperature setpoint (+)

It is used to increase the desired boiler temperature.

23. Button for reducing the boiler temperature setpoint (−)

It is used to decrease the desired boiler temperature.

24. RESET button

When the boiler is in lock-out mode, the **RESET** button is pressed to reset the lock-out and restore "Standard" operation. When modifying any of the parameters, press the **RESET** button to complete the screen cycle and save the changes.

25. Navigation increase button (▲)

It is used to navigate through the different menus.

26. Navigation decrease button (▼)

It is used to navigate through the different menus.

27. DHW operating mode selector ( )

With it, it is possible to select the Domestic Hot Water operating mode.

28. Heating operation mode selector ( )

With it, it is possible to select the heating operation mod.

3.1 Digital display

The **Fusión Hybrid Gas Condens R** module is electronic and has a display for viewing the different settings. The display has various display areas where different icons and numbers appear to indicate the different statuses of the module.

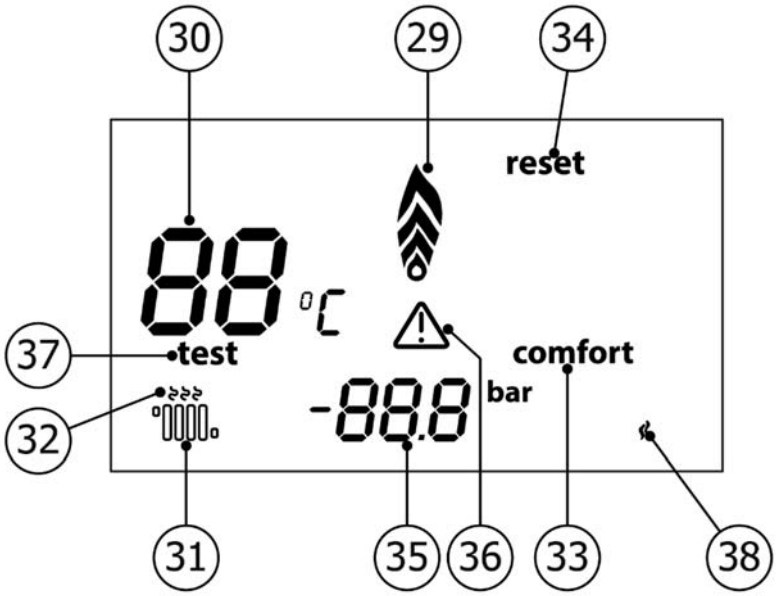

29. Flame display

Shows the flame detection and the power at which the boiler is operating.

30. Module temperature

It displays the module temperature.

31. Heating mode operation display

It indicates that the heating mode is activated.

32. Heating demand display

It flashes when there is heating demand.

33. Comfort mode operation display

It indicates that the comfort mode is activated.

34. Reset request display

It is displayed when the boiler needs to be reset.

35. Digital manometer

It displays the heating circuit pressure.

36. Error display

It is displayed when an error occurs in the boiler.

37. Test mode operation display

It indicates that the test mode is activated.

38. DHW demand display

It flashes when there is DHW demand.

4 INSTALLATION INSTRUCTIONS

The **Fusion Hybrid Gas Condens R** module can only be installed in combination with a heat pump from the **DUAL CLIMA R** line, supplied by **DOMUSA TEKNIK**. Therefore, for its operation, these devices should be connected to each other, both hydraulically and electrically. In this section, the necessary operations for said connection are described in detail.

The module must be installed by personnel authorised by the Ministry of Industry, in compliance with the applicable laws and regulations. In general, these laws and regulations are the "Basic Gas Installation Standards", the "Heating, Air Conditioning and Domestic Water Installation Regulation" and all other local regulations.

The module is suitable for heating water to a temperature below boiling point at atmospheric pressure. It must be connected to a heating installation and/or a domestic hot water distribution network, which must always be compatible with its performance and power.

This appliance should only be used for the purpose for which it has been expressly designed. Any other use is considered unsuitable and therefore hazardous. The manufacturer shall not be considered liable under any circumstances for damage caused by unsuitable, erroneous or unreasonable use.

Remove all the packaging and check that the contents are complete. In case of doubt, do not use the boiler. Contact your supplier. Keep the packaging elements out of reach of children, as they can be dangerous.

When you no longer wish to use the module, disable the parts that could represent a potential hazard.

4.1 Location

The module must be located in a sufficiently ventilated area, with openings directly onto the outside of the building (as required in the Gas Installations Regulation). It must be located so that the air grilles on the premises are not obstructed and normal boiler maintenance is possible even if it is placed between items of furniture.

DANGER

It is not necessary to keep a distance between the appliance and objects made of combustible materials, since the temperature of the device cannot exceed the maximum permissible flow temperature in heating mode if the device operates with its nominal heat output.

Anyway, it is recommended not to install it near papers, newspapers, magazines or any flammable object.

Do not install the module near household waste.

Avoid using explosive and easily flammable substances in the room

4.2 Hydraulic installation of the heating and DHW circuit

The hydraulic installation should be carried out by qualified personnel, in compliance with the current installation regulation (RITE) and considering the following recommendations:

- The inside of the installation piping should be thoroughly cleaned before switching on the boiler.
- We recommend inserting cut-off valves between the installation piping and the appliance to simplify maintenance tasks.
- If the module is installed at a lower height than the heating installation, it is advisable to create a siphon at the boiler outlet, to prevent the installation from heating up due to natural convection when heating is not required.
- When the DHW supply pressure is over 0.7 MPa (7 bar), a pressure reducer must be fitted.
- It is advisable to install a thermostatic mixing valve at the DHW outlet to protect against burns and to guarantee a constant, stable supply of hot water.
- **The condensation pipe must lead to a drain outlet**, as the **Fusion Hybrid Gas Condens R** module is a gas condensation module, and a large amount of water may be generated. In addition, before starting up the boiler, it is advisable to fill the condensation outlet siphon tube with water, so that the flue gases do not exit through this tube.
- All water circuit piping **MUST** be insulated to prevent condensation during operation in cooling mode and reduction of cooling and heating capacity, as well as to prevent freezing of outside pipes during winter. The minimum insulation thickness of the pipes should be 19 mm (0.039 W/mK), preferably comprising a closed cell insulation or a vapor barrier. In outdoor areas exposed to the sun, the insulation must be protected from the effects of degradation.
- Drain valves and suitable devices should be fitted for the correct removal of air from the circuit during the filling stage.
- A water filter **must be installed** in the water circuit of the heat pump, in order to avoid obstructions or narrowing caused by dirt in the installation. The filter **MUST** be installed before filling the installation with water and in the return branch of the machine, in order to avoid the entry of dirty water into the heat exchanger (condenser). It is advisable to insert this filter between two cutting keys, in order to avoid emptying the installation during cleaning. The type of filter installed must be adapted to the particular characteristics of each installation (type and material of the water pipes, type of water used, water volume of the installation, etc.). The water filter should be checked and cleaned, if necessary, at least once a year. In new installations, however, it is advisable to check it within the first few months of its commissioning.
- The **Fusion Hybrid Gas Condens R** hydraulic module is an accessory that should be installed in combination with a **DUAL CLIMA R** heat pump for its correct operation. Therefore, in addition to the recommendations described above, it must comply with those indicated in the heat pump installation manual.

Important

For the correct operation of the heat pump, it is essential to install a filter in the return line of the heat pump. This filter is included in the documentation bag of the Fusion Hybrid Oil module.

4.3 Gas circuit connection

For the installation of any type of gas, the installer must be authorised by the Ministry of Industry and strictly follow the applicable Gas Regulations.

The gas connection must be made using a rigid pipe with a shut-off valve. The gas pipe diameter is not determined by the boiler connection. It should be calculated in accordance with its length and consequently its pressure drop.

Lastly, it must be checked that it correctly sealed against any gas leaks.

4.4 Electric connection

The module is equipped for connection at 230 V, 50 Hz to terminals 1 and 2 of terminal strip J1 (see "*Electrical Connection Diagram*"). **Make sure that the appliance is grounded**.

In addition, for the correct operation of the **Fusion Hybrid Gas Condens R**, it is also necessary to connect the heat pump to the power supply as indicated in the section "Connection to the general power supply" of the **DUAL CLIMA R** heat pump manual.

DANGER

When handling the electrical installation, make sure that both the module and the DUAL CLIMA R heat pump are disconnected from the mains.

The **Fusion Hybrid Gas Condens R** module features a series of motorised diverting valves and DHW and Heating support activation signals that are sensed by the **DUAL CLIMA R** heat pump. To do this, electrical cables with a minimum section of 0.5 mm2 must be passed from the terminal strip of the **DUAL CLIMA R** heat pump to the inside of the **Fusion Hybrid Gas Condens R** module. The module has a series of cable glands at the rear, through which it is possible to insert these cables into the equipment.

The electrical connection of these signals will be carried out between the general terminal strip of the heat pump and the terminal strip of the module, by opening the door and removing the front cover of the internal control panel to access it. The following figure describes how to connect all the signals necessary for correct operation.

First, it is necessary to remove the jumpers in the room thermostat connection of the **DUAL CLIMA R** heat pump.

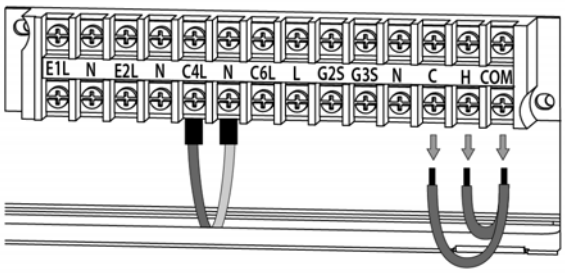

Once the jumpers have been removed, all the connections specified in the following diagram must be made.

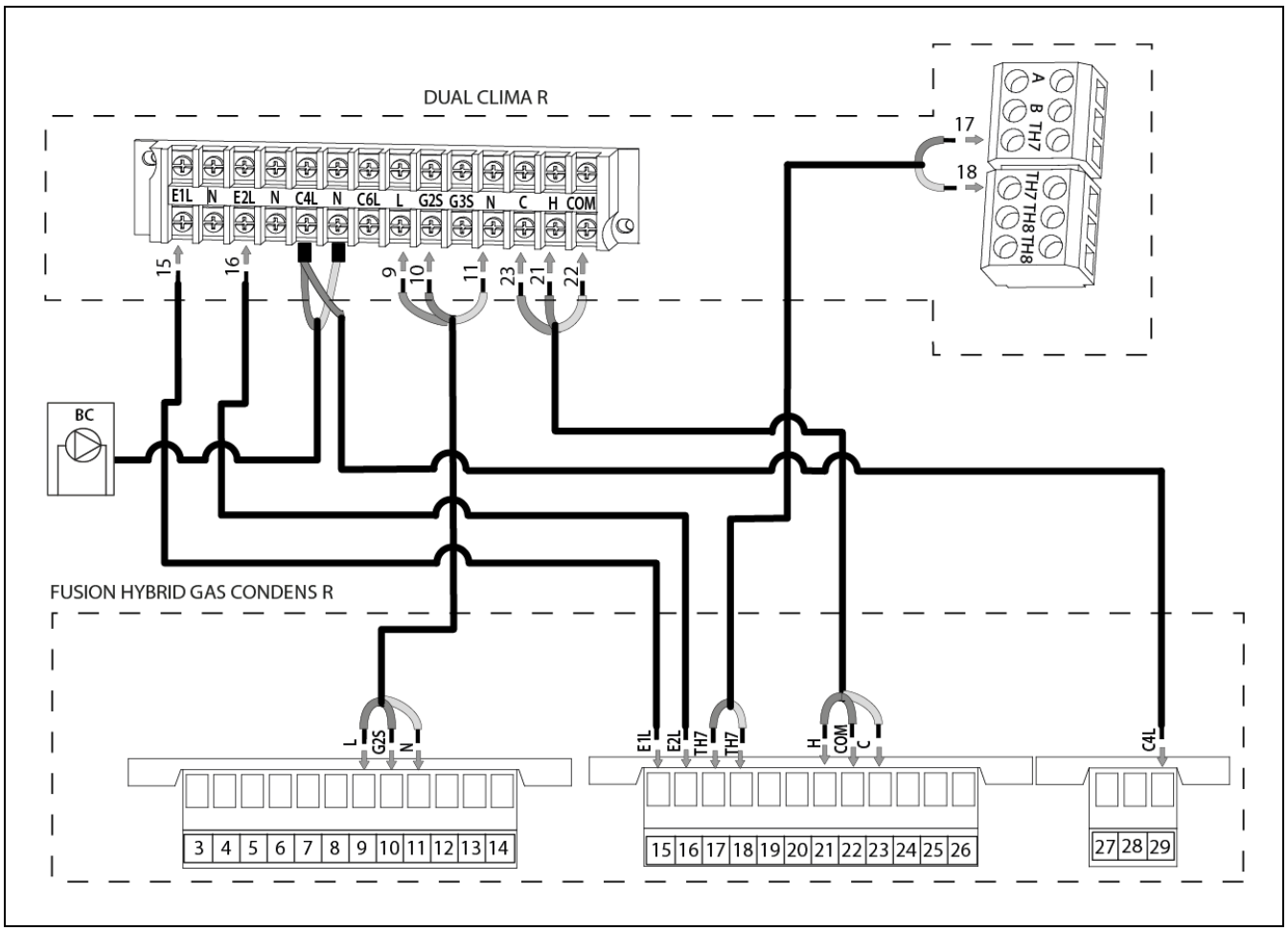

DANGER

When handling the electrical installation, make sure that both the module and the DUAL CLIMA R heat pump are disconnected from the mains.

For the electrical connection of the support circulation pump C4 (optional), first two wires must be connected in parallel with the heat pump circulation pump between terminals C4L and N of the **DUAL CLIMA R** heat pump. These cables will be connected to the same terminals (see figure). Then, these cables must be connected from the terminal strip of the **DUAL CLIMA R** heat pump to the inside of the **Fusion Hybrid Gas Condens R** module on terminals 29(see "*Electrical diagram*").

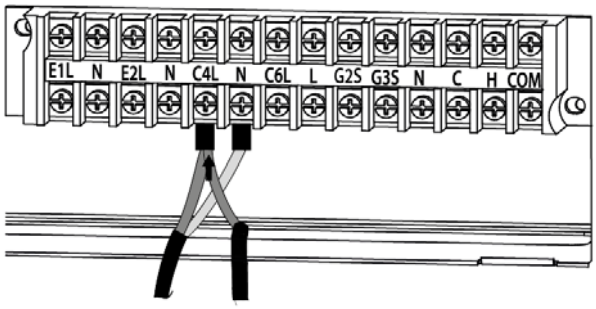

4.5 Assembly of the DHW probe

For the correct operation of the **Fusion Hybrid Gas Condens R** hydraulic module, the DHW probe, supplied in the **DUAL CLIMA R** heat pump, must be inserted in the bulb sheath provided in the module tank. This probe is located inside the machine and is identified as "**DHW TANK SENSOR**". For correct assembly, the probe must be inserted into the bulb sheath provided, following the steps indicated below:

1. Access the module and remove the access cover to the tank sheath, unscrewing the cover fixing nut.

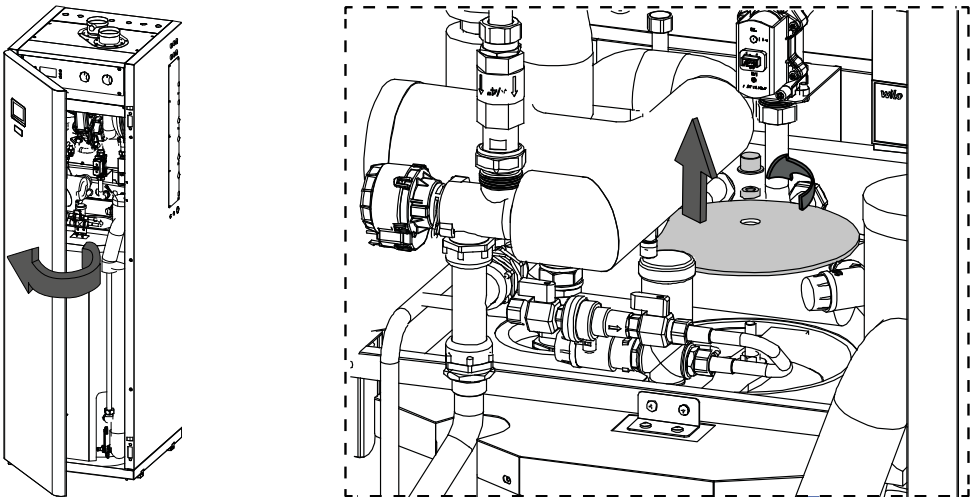

2. Insert the sensor into the bulb sheath provided in the tank. Be sure to insert the sensor bulb until it stops against the bottom of the bulb sheath.

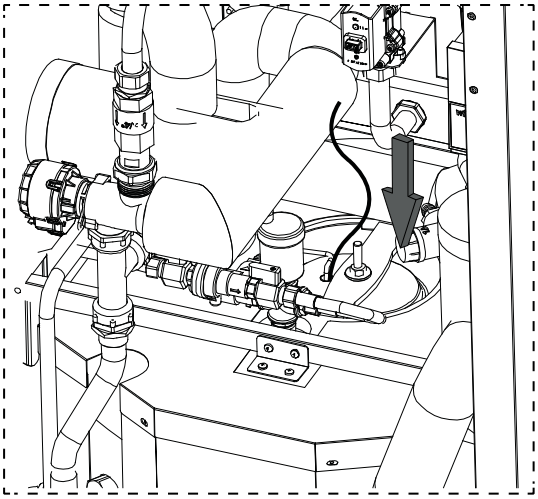

3. Reassemble the access cover to the tank, screwing the fixing nut.

4. Connect the probe to the electrical connection strip on terminals 19 and 20. (see *"Electrical Diagram"*).

DANGER: When handling the electrical installation, make sure that both the module and the DUAL CLIMA R heat pump are disconnected from the mains.

4.6 Assembly and connection of the control panel

The control panel is supplied inside the heat pump and must be mounted on the front of the **Fusion Hybrid Gas Condens R** hydraulic module. To do this, open the module door and access the control pannel holder located in the rear part. For its correct assembly, please carefully follow the following steps:

1. Open the door of the **Fusion Hybrid Oil R** module.

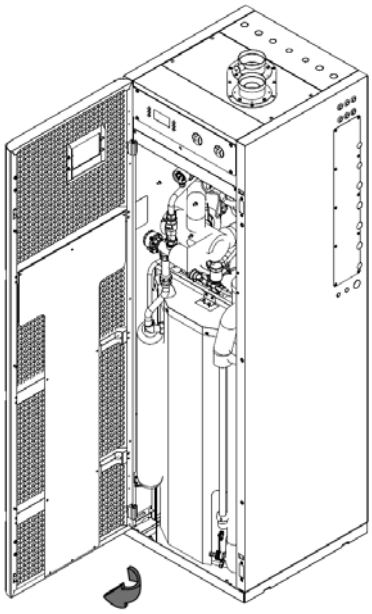

2. Support the outside of the door of the **Fusion Hybrid Oil R** module with your hand.

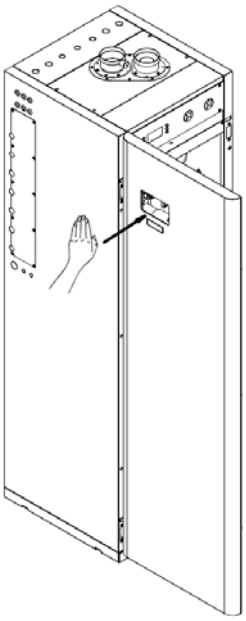

3. Keeping your hand on the outside of the door, attach the control panel removed from the **DUAL CLIMA R** heat pump, at the rear of the front, into the hole in the control-holder support and press lightly until it is flush with the surface of the door.

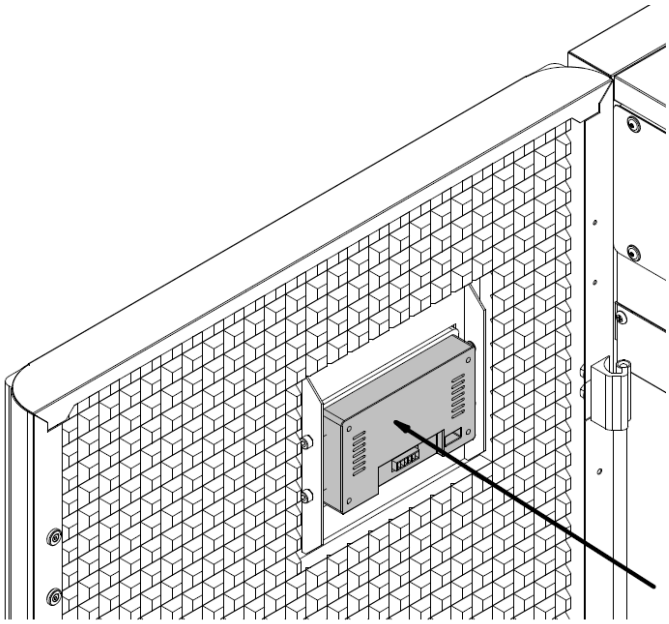

4. Tighten the 4 screws by hand tightening, until the control panel is fixed. It is not necessary to use a wrench, it is sufficient to adjust by hand.

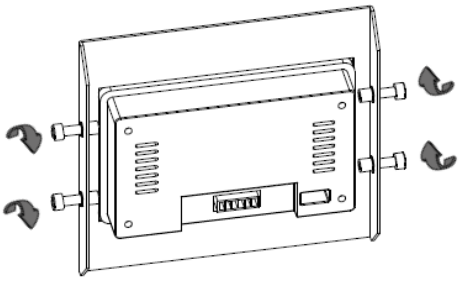

5. Insert the connector, which incorporates the cable for the heat pump control panel, at its end with the connector on the back of the control panel. A sufficiently long cable length must be provided inside the module, in such a way that it is possible to open the front of the equipment without having to disconnect said cable and facilitate any maintenance operation inside.

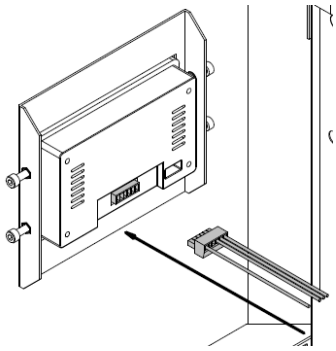

Before starting the heat pump, make sure that the other end of the cable that we have connected to the control panel is connected to the external machine.

The cable supplied with the heat pump is 5 metres long. Where necessary, it can be extended up to a maximum distance of 100 metres (section between 0.5÷1.25 mm2).

DANGER

When carrying out any work on the electrical installation, always make sure that both the module and the DUAL CLIMA R heat pump are disconnected from the mains.

Nota: Provide a sufficient length of cable inside the module in order to facilitate the opening of the front.

4.7 Configuring the Heat Pump

To properly configure and manage the operation of the **DUAL CLIMA R** heat pump, please carefully read the "Installation and Operating Instructions Manual" supplied alongside the **DUAL CLIMA R** heat pump.

Nevertheless, in order to obtain all the features for which the supporting module has been provided, it should be ensured at least that the DHW service and the Heating and/or Cooling service are activated, by adjusting the parameters of the control panel of the heat pump (see "*Settings menu*"). When a service is disabled, all operating modes related to that service will disappear from the control panel.

In addition, for the correct management of the **DUAL CLIMA R** heat pump with the support module, it will be essential to set the value 3 through parameter **P27** of the Technical menu of the **DUAL CLIMA R** heat pump and value 0 through parameter **P26** of the Technical menu of the **DUAL CLIMA R**.

4.8 Combustion product removal

The combustion product exhaust ducts must be installed by qualified personnel and must comply with current legislation and standards.

The **Fusion Hybrid Gas Condens R** module is a sealed oil-fired boiler, and the combustion products are therefore removed through an outlet pipe, with a separate air intake from outside. We recommend that the position of the outside exhaustion duct is as shown in the figures and in the table below:

Gas removal terminal position		**Minimum distance (cm)**
A	From openings (e.g. doors, windows, ventilation grilles)	60(*)
B	Under a cornice or drainpipes	30
C	Under a gutter	30(**)
D	Under a balcony	30
E	From vertical or horizontal pipes	30(**)
F	From internal and external corners of the building	30
G	From the ground, roof or balconies	250
H	From the side opposite to a marquee (when no other outlet is installed)	60
I	From the wall with the pipe to the front wall	120
J	From openings (e.g. doors, windows) under the roof	120
K	Between two vertical ducts	150
l	Between two horizontal ducts	100
M	From an adjacent vertical duct	50
N	From a front surface with openings	200

(*) The end of the removal duct must be at least 40 cm from any opening in the façade.

(**) If the pipe is made of materials sensitive to the action of the combustion gases, this distance should be at least 50 cm.

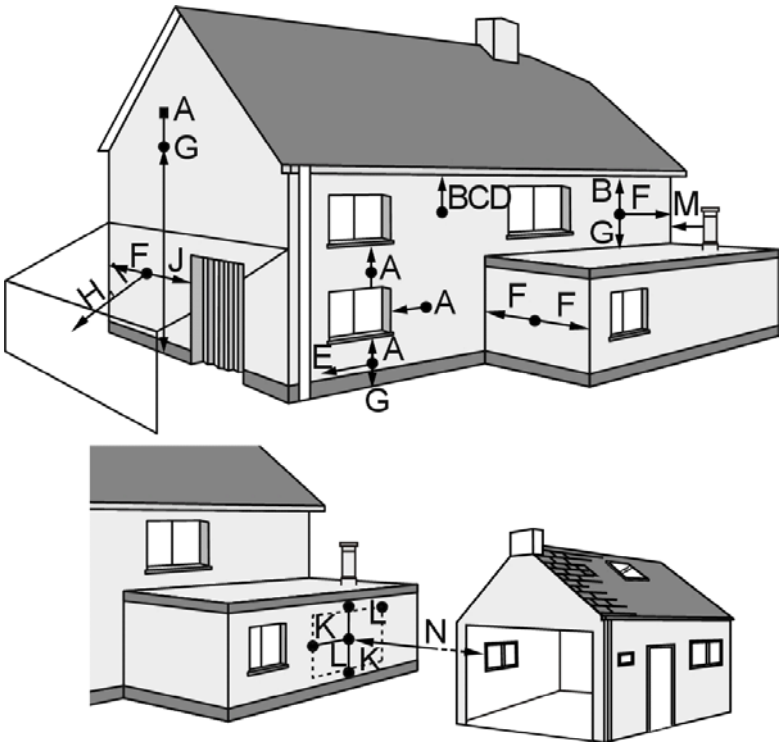

CAUTION

The terminal must be fitted with suitable protection if it is less than 2 metres from a balcony, on a flat roof or surface that could be accessed by people.

The wall the gas removal and air intake ducts are fixed to must not be made of combustible or flammable materials, and the wall the end of the duct passes through must lead to the outside of the home. There must be no hazardous materials or obstructions near the duct.

If the outlet passes through a wall made of combustible material the end terminal must be covered with at least 20 mm of incombustible material and must be at a distance of at least 50 mm from any flammable material.

The parts connecting the flue gas outlet must be correctly joined using sealing gaskets. Check there are no leaks from any part of the removal circuit.

Switch off the boiler and wait for the pipes to cool down before cleaning the gas removal and air intake ducts.

The gas removal and air intake ducts must be protected from snow accumulation.

Important: All accessories used for combustion product removal and air intake should be those supplied by DOMUSA TEKNIK.

However, it is also possible for type C_{63} evacuations, to use other manufacturers accessories for air inlet and gas evacuation, as long as they are duly certified with their corresponding CE marking and are suitable for boiler working conditions.

Important: There must be taken into account the regulations of each country in the field of construction and installations for the assembly and commissioning of the heating installation.

For the correct installation of accessories for air inlet and gas evacuation of other manufacturers (type C_{63}) the following information must be taken into account:

- It is advisable to fit the removal pipe in a slightly upwardly inclined direction, at around 2-3º, thus preventing any water and condensation from dripping out.
- The surface temperature in the combustion air duct is below 85 ° C.
- The air intake must not be located on a wall opposite a flue gas extraction system, as it could take in the gases emitted.

5 COMBUSTION PRODUCT REMOVAL

The gas removal and air intake systems may be oriented in any direction (north, south, east or west). Some special components such as elbows are used to help reach certain positions. Each removal terminal kit includes an adapter for connection to the boiler and a removal terminal.

The total length of the tubes must not exceed the maximum value defined. If the removal installation includes elbows, on calculating the total length, please note that each elbow has a resistance equal to a specific linear Leq "equivalent length" (see table).

There are two different types of terminals (horizontal and vertical), for both the coaxial removal system and the dual flow removal system.

Carefully study the diagrams representing the different types of removal and select the one that best suits the conditions of your installation. To choose the removal accessories required for each installation, please refer to the list of accessories on the **DOMUSA TEKNIK** price list.

Maximum total length:

Type	Pipe diameter [mm]	Orientation	Maximum length [m]
Coaxial	Ø60/100	Horizontal	10
		Vertical	11
	Ø80/125	Horizontal	20
		Vertical	22
Dual Flow	Ø80/80	Horizontal	30
		Vertical	

Equivalent length of elbows and adapters:

Type	Pipe diameter [mm]	Elbow	Equivalent length [m]
Coaxial	Adapter Ø60/100 -> Ø80/125	-	0.5
	Ø60/100	45º	1.0
		90º	1.3
	Ø80/125	45º	1.0
		90º	1.3
Dual Flow	Ø80/80	45º	1.4
		90º	2.2

All accessories used for combustion product removal and air intake must be supplied by DOMUSA TEKNIK.

5.1 Type C_{53} dual horizontal flow removal and intake systems

For this type of boiler, combustion product removal and air intake take place through separate Ø80/80 mm ducts, using the Ø80/80 dual duct outlet kit, code CGAS000325.

It is advisable to fit the removal pipe in a slightly upwardly inclined direction, at around 2-3º, thus preventing any water and condensation from dripping out.

Standard removal system

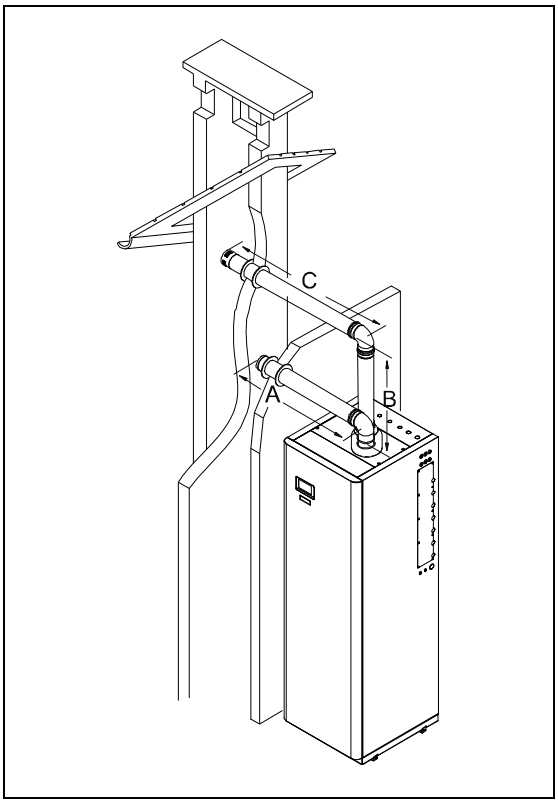

Extended removal system

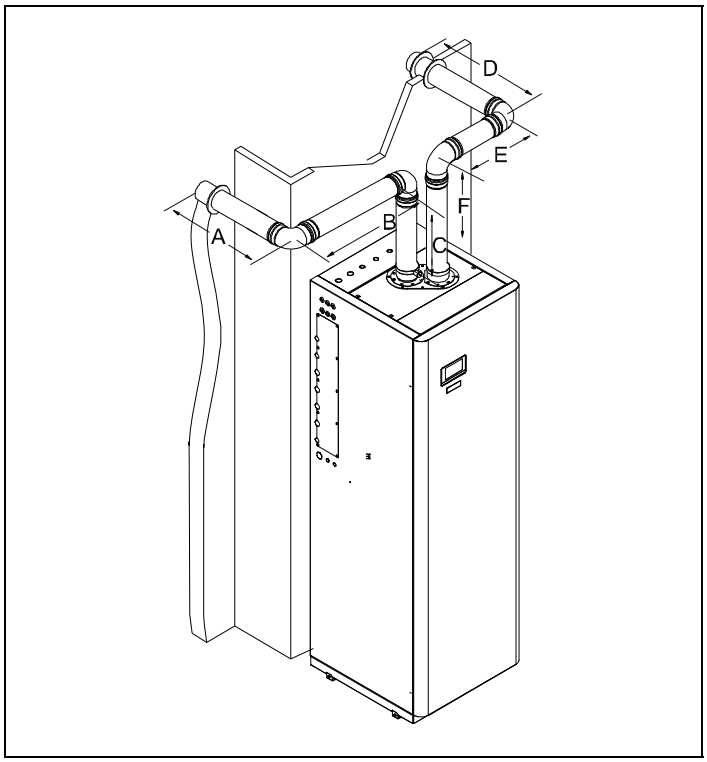

Ø80/80

* Max length: A + B + C - (1 x codo 90º)

* Max length: 30 - 2,2= 27,8 m.

Ø80/80

* Max length: A + B + C + D + E + F - (4x90º elbows)

* 30 - 4 x 2,2 = 21,2 m

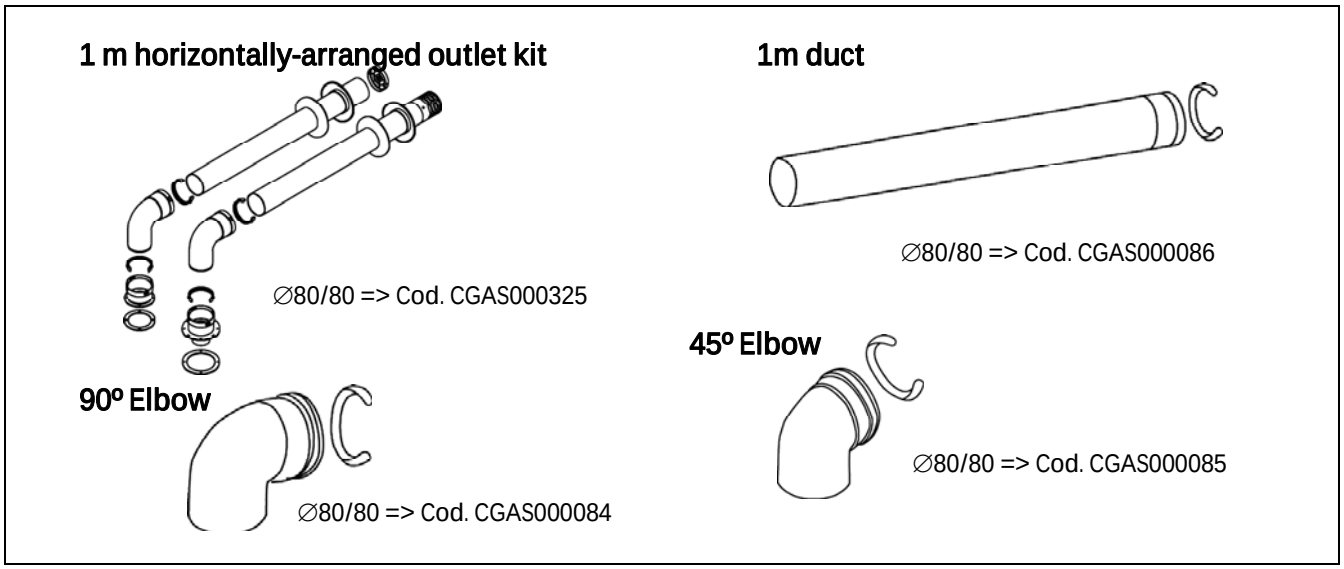

Important **The air intake must not be located on a wall opposite a flue gas extraction system, as it could take in the gases emitted.**

5.2 Type C_{83} dual horizontal flow removal and intake systems

For this type of boiler, combustion product removal and air intake take place through separate Ø80/80 mm ducts, using the Ø80/80 dual duct outlet kit, code CGAS000325.

It is advisable to fit the removal pipe in a slightly upwardly-inclined direction, at around 2-3º, thus preventing any water and condensation from dripping out.

Standard removal system

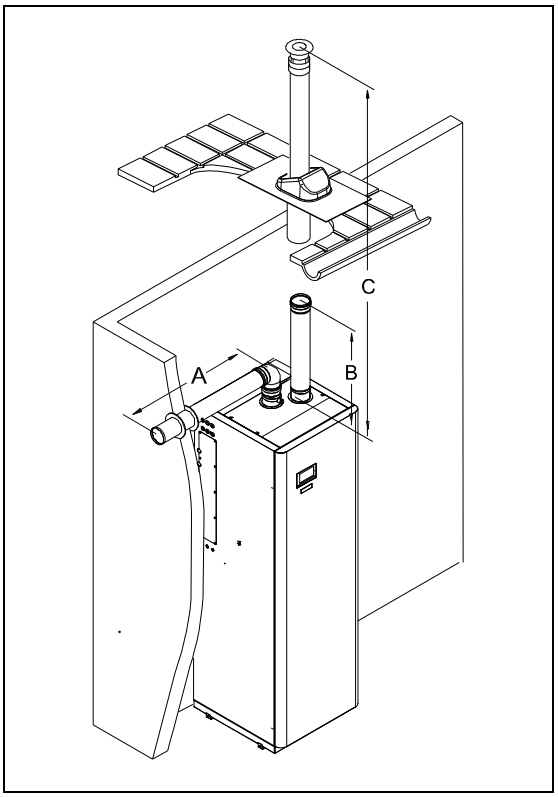

Ø80/80
=> Max length: A + B + C = 30 m.

Extended removal system

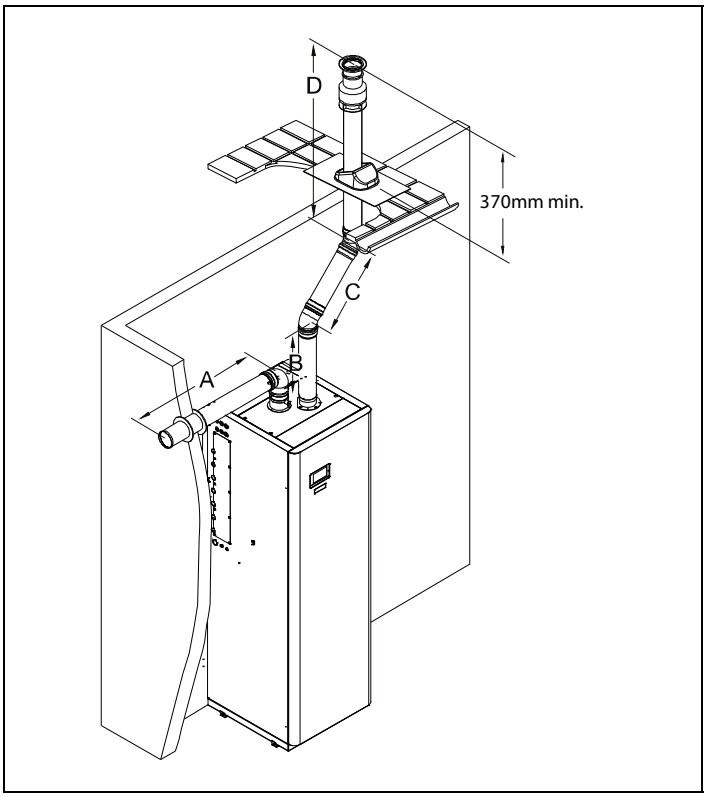

Ø80/80
=> Max length: A + B + C + D - (2 x 45º elbows)

=> 30 - 2 x 1,4 = 27,2 m

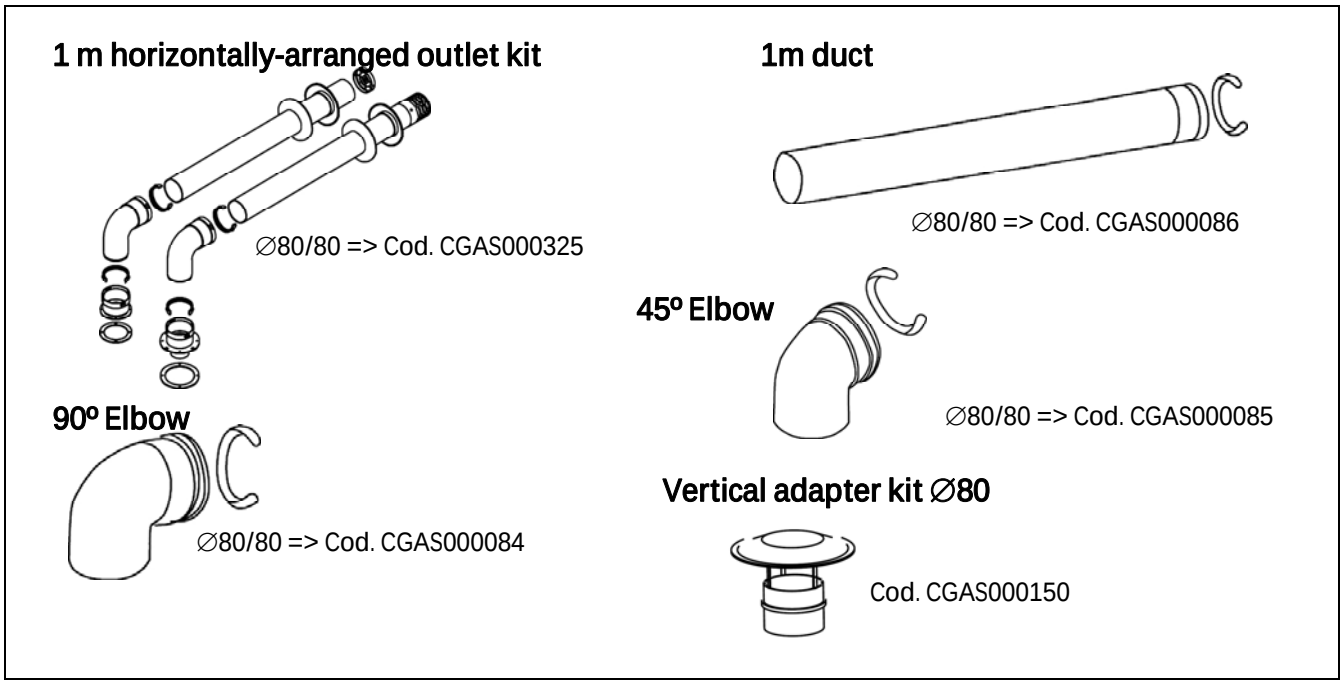

5.3 Changing from dual duct flue gas removal to coaxial flue gas removal

The **Fusion Hybrid Gas Condens R** module has a Ø80 dual duct system for combustion product removal and air intake. To perform the removal of combustion products by means of a Ø60/100 or Ø80/125 coaxial system, it must be used an adaptor kit (supplied under request).

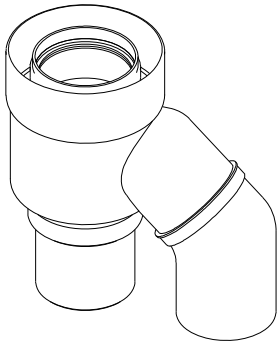

Coaxial tuve adaptor kit ∅80/125
Cod. CGAS000221

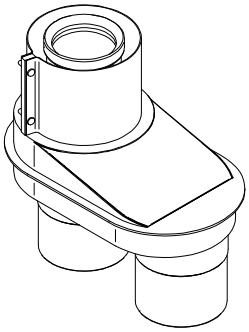

Coaxial tuve adaptor kit ∅60/100
Cod. CGAS000399

5.4 Type C_{13} horizontal coaxial removal and intake systems

Removal of combustion products and air intake may be made via concentric Ø60/100 pipes (60 mm for combustion product removal and Ø100 mm for air intake) or through concentric Ø80/125 pipes (80 mm for combustion product removal and Ø125 mm for air intake).

It is advisable to fit the pipe in a slightly upwardly inclined direction, at around 2-3º, to prevent any water or condensation from dripping out.

Standard removal system

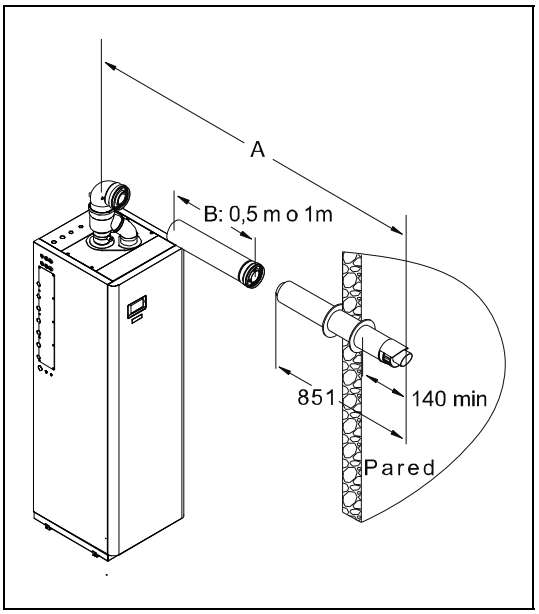

Ø60/100: Maximum total length: A = 10 m.

Ø80/125: Maximum total length: A = 20 m.

Extended removal system

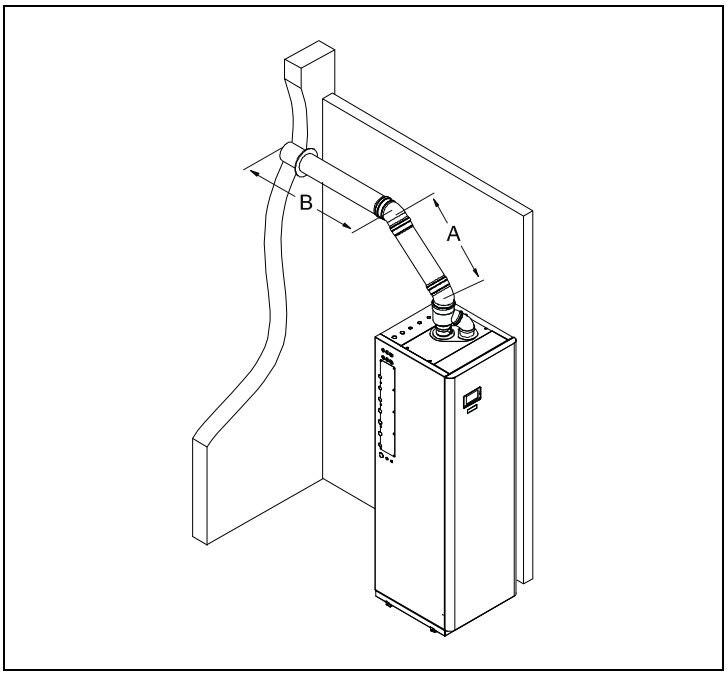

Ø60/100: Max length: A + B - (1x45º elbow)=10-1,0=9m.

Ø80/125: Max length: A + B - (1x45º elbow)=20-1,0=19 m.

1 m horizontally-arranged outlet kit

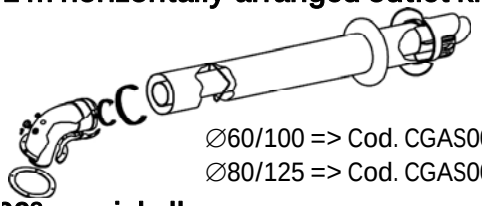

∅60/100 => Cod. CGAS000375
∅80/125 => Cod. CGAS000322

90º coaxial elbow

∅60/100 => Cod. CGAS000316
∅80/125 => Cod. CGAS000080

Coaxial tuve adaptor kit

∅60/100 => Cod. CGAS000399
∅80/125 => Cod. CGAS000221

1m coaxial duct

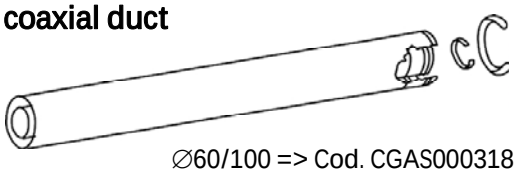

∅60/100 => Cod. CGAS000318
∅80/125 => Cod. CGAS000082

45º coaxial elbow

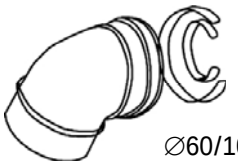

∅60/100 => Cod. CGAS000317
∅80/125 => Cod. CGAS000081

Important **In case of installing the boiler in type C_{13} in double duct, it must be taken into account that the combustion product removal and air intake ducts must be installed within a 50cm square. In addition, the recommended minimum distance between both ducts is 40cm.**

5.5 Type C_{33} vertical coaxial removal and intake systems

Removal of combustion products and air intake may be made via concentric Ø60/100 pipes (60 mm for combustion product removal and Ø100 mm for air intake) or through concentric Ø80/125 pipes (80 mm for combustion product removal and Ø125 mm for air intake).

Standard removal system

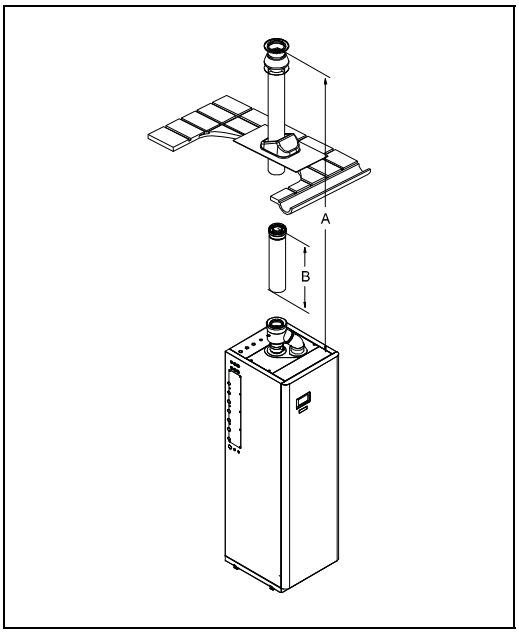

Ø60/100: Maximum total length: A = 11 m

Ø80/125: Maximum total length: A = 22 m

Extended removal systema

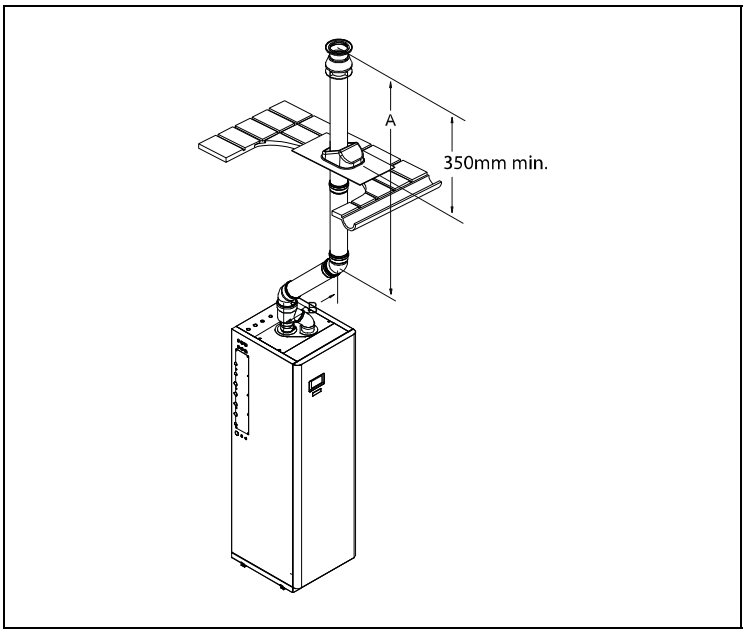

Ø60/100: Max length: A + B - (1x 45º elbow) = 11 - 1 = 10 m

Ø80/125: Max length: A + B - (1x 45º elbow) = 22 - 1 = 21 m

1 m vertical-arranged outlet kit

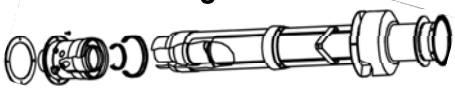

∅60/100 => Cod. CGAS000380
∅80/125 => Cod. CGAS000315

90º coaxial elbow

∅60/100 => Cod. CGAS000316
∅80/125 => Cod. CGAS000080

45º coaxial elbow

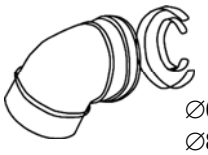

∅60/100 => Cod. CGAS000317
∅80/125 => Cod. CGAS000081

Coaxial tuve adaptor kit

∅60/100 => Cod. CGAS000399
∅80/125 => Cod. CGAS000221

1 m coaxial duct

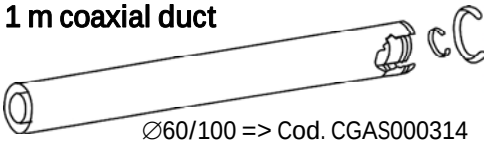

∅60/100 => Cod. CGAS000314
∅80/125 => Cod. CGAS000082

Flar roof

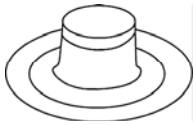

Teja negra
Cód. CGAS000074

Sloped roof

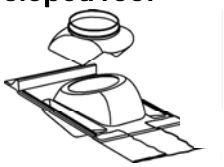

Teja negra
Cód. CGAS000075

Important **In case of installing the boiler in type C_{33} in double duct, it must be taken into account that the combustion product removal and air intake ducts must be installed within a 50cm square. In addition, the recommended minimum distance between both ducts is minimum 40cm.**

6 STARTING UP THE BOILER

6.1 Prior warnings

Repair and maintenance of the module must be carried out by a qualified professional, authorised by **DOMUSA TEKNIK**. For optimum functioning and conservation of the boiler, it should be serviced annually.

Please carefully read this instruction manual and keep it in a safe, easily-accessible place.

Before any servicing, disconnect the boiler from the mains and cut off the gas supply. Any manipulation of the sealed parts of the boiler is prohibited.

DOMUSA TEKNIK will not be liable for any damages caused by failure to follow these instructions.

6.2 Filling the domestic hot water tank

The hot water tank must be filled before filling the heating circuit. Open the flow of domestic hot water to the hot water tank, and turn on a hot water tap in the installation. When the tap begins to run freely, turn it off, as this means the hot water tank is full.

6.3 Filling the heating circuit

The **Fusion Hybrid Gas Condens R** module is equipped with a filling disconnector. The heat pump (external unit) includes a manual drain valve on the upper part of the heat exchanger flow tube (condenser). Open it during the filling process and wait for the water to start running (please refer to the operations manual of the **DUAL CLIMA R** heat pump). The air should also be bled from the rest of the installation using the air bleed valves provided. The filling must be carried out slowly, thereby facilitating air evacuation from the water circuit. Once the installation is full, close the disconnector valves.

The **Fusion Hybrid Gas Condens R** module have a pressure sensor for controlling the pressure of the installation. If it drops below 0.05 MPa (0.5 bar), a low pressure alarm ("**E02**") will appear on the display.").

Note: Turning on the module or the heat pump without water may cause serious damage to the equipment.

6.4 Gas connection

For the installation of any type of gas, the installer must be authorised by the Ministry of Industry and strictly follow the applicable Gas Regulations. The gas installation must comply with the Gas Installation Regulation (RIGLO).

However, the following recommendations must be complied with, at the least:

- Before installing the gas pipes, check the type of gas is compatible with the boiler.
- Check that the gas meter in the home can measure the rate of gas supply required.
- The gas pipe diameter is not determined by the boiler connection. It should be calculated in accordance with its length and consequently its pressure drop.
- The pipes must be directly connected to the main gas supply pipe, not connected in parallel to other gas appliances.

- Check there are no leaks from the installation.
- The gas supply company is the sole responsible for connecting the gas meter to the gas installation.
- The gas installation pipes must be made of suitable materials and comply with the applicable legislation to this respect (RIGLO).
- The gas connection must be made using a rigid pipe, inserting a shut-off valve between the boiler and the pressure regulator.
- All the pipes must be suitably fixed in place.

WARNING

If a gas type other than the one specified on the boiler reference plate is used, it could cause fire or even explosion.

Make sure that the gas supply is suitable for the type and capacity of the boiler.

The boiler must be left running for 10 minutes before checking the gas pressure, to obtain thermal equilibrium.

If the boiler is used with propane, a gas regulator suitable for this type of gas must be installed. The connection and installation must be made in accordance with the applicable regulations and standards at the time of installation (RIGLO).

DANGER

Check the seal and draining of the entire installation, as a gas leak could cause serious damage and/or death.

If a propane-fired boiler is installed in an interior room or compartment underground, one side of the building must be open to the exterior.

If a gas tank is used, it must be installed in a cool, shaded place away from direct sunlight. It must also be thoroughly secured to prevent it from tipping over, which could cause an explosion.

Keep all doors and windows closed while you are bleeding the gas pipes and put out all cigarettes, flames or any possible source of ignition.

Note **The output pressure of the pressure regulator must be in accordance with Standard EN 437.**

6.5 Electrical connection

The module electrical connections must be made by sufficiently qualified staff in strict compliance with the sections below and with any electrical safety regulations applicable at time of installation.

DANGER

It must be ensured that the module is disconnected from the electrical supply before carrying out any servicing inside the module and, particularly, on the electric terminal strips.

If the electrical supply is connected electrical contact could occur, causing serious damage and/or death due to electrocution.

The module is designed for mains connection at 230 V - 50 Hz using its standard supplied cable.

Make sure that the electrical installation corresponds to the maximum power to be supplied, as indicated on the module's specifications label. To replace the main fuse on the electronic card, use 2A fuses.

Important **It is essential for the module to be grounded.**

Note **Make sure you have tightened the cables sufficiently. The module electrical connections must be made in compliance with the applicable standards and regulations in the place of installation.**

6.6 Start-up

In order for the **warranty to be valid**, the module must be started up by an official **DOMUSA TEKNIK Technical Assistance Service**. Before the start-up process, the followings must be complied with:

- The module must be connected to the mains.
- The installation must be filled with water (the pressure must be between 0.1 and 0.15 MPa (1 to 1.5 bar)).
- Check the flue is correctly installed.
- Check the gas supply is correctly installed.
- Drain the air from the module gas circuit, opening the gas installation shut-off valve and slightly loosening the valve gas intake pressure port for a moment, as otherwise the air would have to come out gradually through the burner.
- If the installation has flow and return valves, check they are open.
- If chronothermostat or remote control is available, set it to the desired temperature.
- It is essential to carry out a module combustion analysis, using a suitable analyser for this purpose. The combustion analysis will be carried out in the collection of gas samples from the gas outlet. If the analysis shows the combustion is outside the limits indicated in the "Adjusting the combustion" section, adjust the module combustion.

To start up the module, follow the instructions in “Switching on the module” section.

6.7 Installation hand-over

After the initial start-up, the Technical Assistance Service will explain to the user how the module functions, making any observations they consider relevant.

The installer is responsible for clearly explaining to the user the functioning of any control or regulation device forming part of the installation but not supplied with the module.

7 OPERATION

The **Fusion Hybrid Gas Condens R** module is a gas condensing supporting module of the **DUAL CLIMA R** heat pump. Therefore, its operation will be fully managed by the **DUAL CLIMA R** heat pump controllers connected to it, which should be mounted on the front of the module (see "*Assembly and connection of the control panel*").

It must be ensured that parameter **P27** of the Technical menu of the **DUAL CLIMA R** heat pump is at value 3 and that parameter **P26** of the Technical menu of the **DUAL CLIMA R** heat pump is at value 0. This ensures the correct management of the **DUAL CLIMA R** heat pump with the supporting module.

7.1 Switching on the module

Once the power cable is connected to the power supply, the Digital Display (20) will light up.

When the **digital display (20)** lights up, the screen will display the module model, the software version installed, and the type of gas selected.	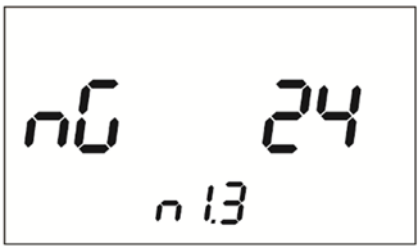
Then the module goes to **OFF** mode.	
Press and hold the **MODE** button to turn the module on and off.	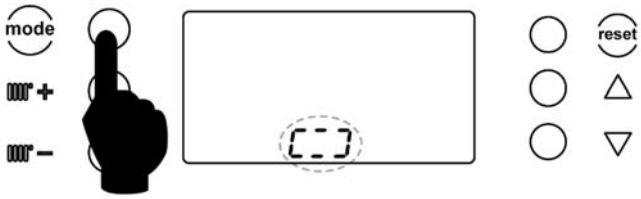

7.2 Selecting the module setpoint temperature

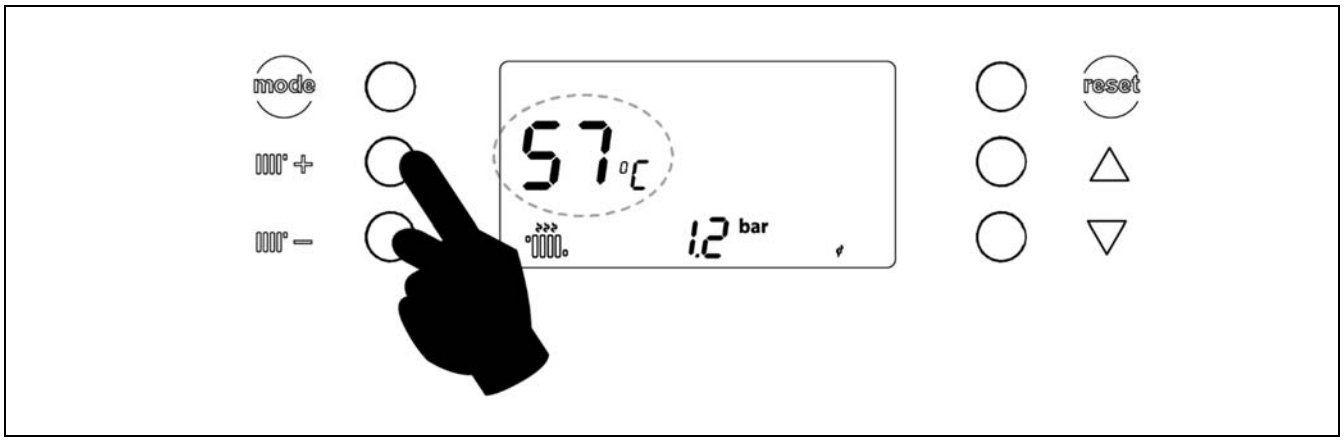

To ensure a correct functioning of module, it is essential to select a heating temperature in the module. The **boiler temperature** setting is carried out using the heating temperature adjustment buttons (+ and −)

The temperature appears on the display with the boiler temperature indicator. The adjustment of the value is confirmed once the light of the screen is turned off.

The selectable boiler setpoint temperature range is 25-80ºC. The **Fusion Hybrid Gas Condens R** module is a condensing supporting module, so, In order to obtain maximum boiler performance and energy savings, it is advisable to select a setpoint temperature of 60-70 ºC, providing this is permitted by the heating system installed and the insulation conditions of your home.

In addition, the maximum module temperature can be limited to 47ºC through parameter **P21**, activating the operation at low temperature.

7.3 Operating in "auto" mode

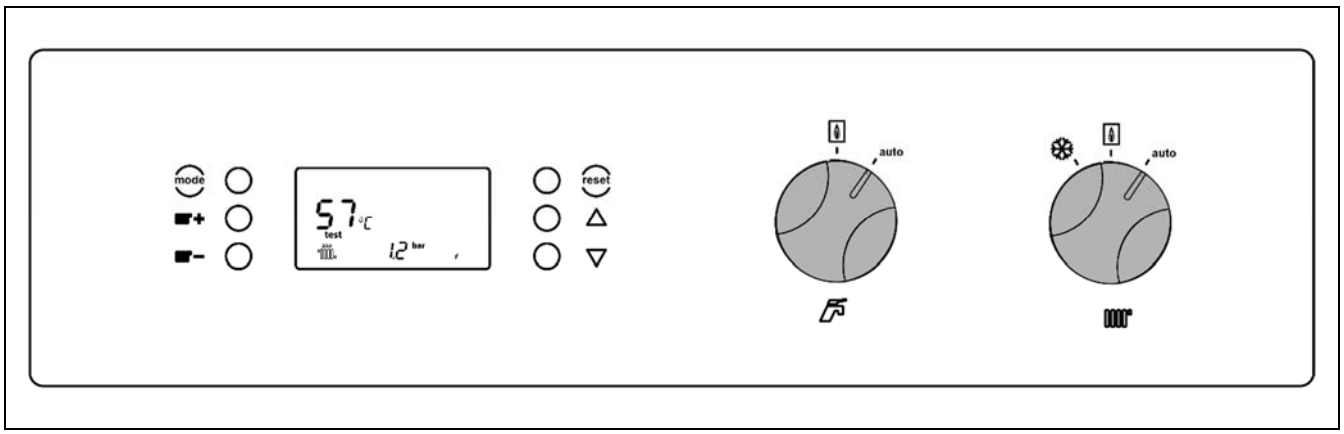

This will be the default operating mode of the **Fusion Hybrid Gas Condens R** module. In this mode, the operation will be managed by the **DUAL CLIMA R** heat pump, as indicated in the instruction manual of the heat pump according to configuration **P27 = 3**. See "*Configuration of auxiliary or supporting energy sources*".

7.4 Operation with the DHW selector *(27)*

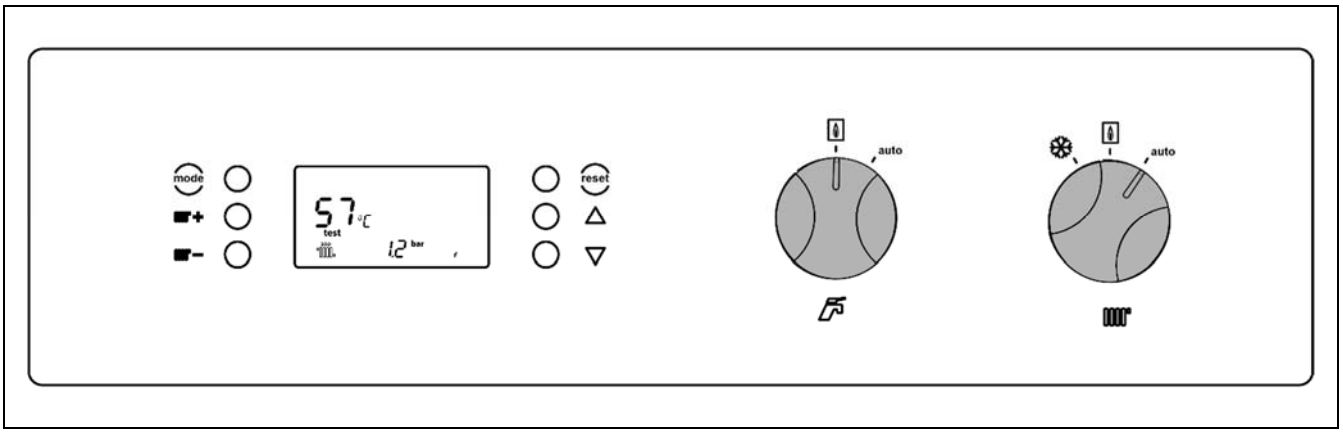

For greater comfort in DHW, by means of the DHW selector ***(27)***, it is possible to change the operating mode and energy source that will work on the DHW demand.

By turning the DHW selector ***(27)*** to position the supporting module becomes the main energy source for the DHW demand. The heat pump stops managing the production of DHW, leaving the heating and production of DHW to the module. The DHW temperature for this operating mode will become the maximum selectable in the heat pump.

In this operating mode, the display of the temperature of the DHW tank becomes "69" in a fixed way, this being not its real temperature, as the complete management of the temperature of the DHW tank is performed by the supporting module.

7.5 Operation with the Heating selector *(28)*

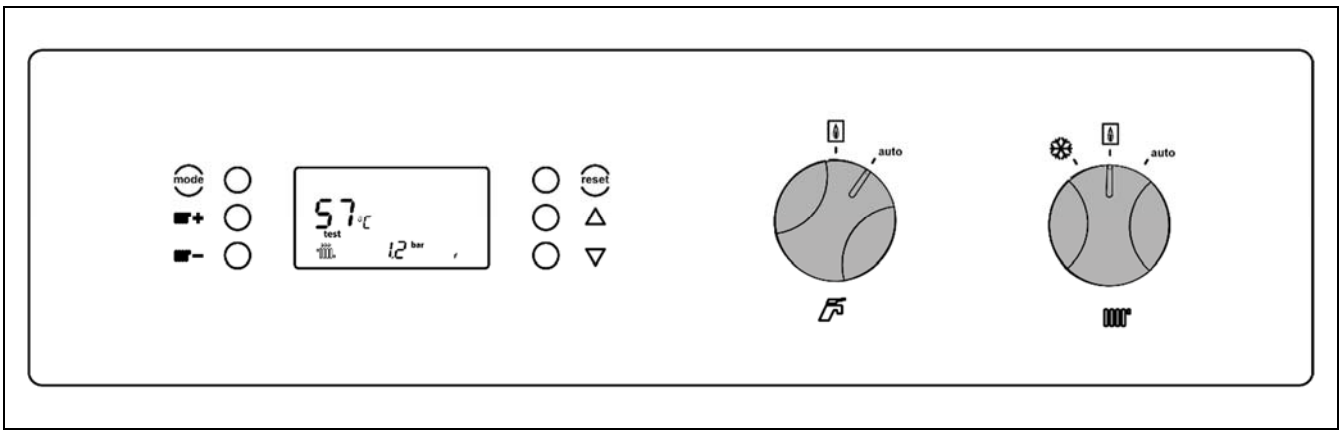

For greater comfort in heating, by means of the heating selector ***(28)***, it is possible to change the operating mode and energy source that will work on the heating demand.

By turning the heating selector ***(28)*** to position the supporting module becomes the main energy source for heating. The heat pump stops managing the heating demand, leaving the complete management to the module.

The heating temperature for this operating mode will be the one selected in the module, see "*Selecting the module setpoint temperature*".

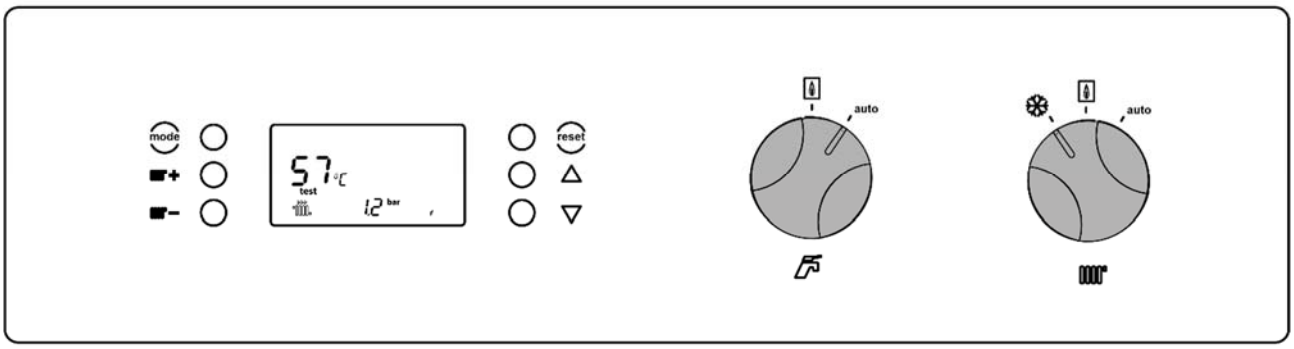

For a better comfort in the air conditioning, by the heating selector ***(28)***, it is possible to change the operating mode in air conditioning demand.

By turning the heating selector ***(28)*** to position ❄ the heat pump begins working exclusively in air conditioning mode. The heat pump stops managing the heating demand by focusing its operation exclusively on air conditioning. The DHW demand will be managed according to the DHW selector ***(27)***.

By combining the operating modes in the heating selector ***(28)*** in position ❄ and the DHW selector ***(27)*** in position 💧 an uninterrupted air conditioning operation is achieved with the heat pump, while the support module manages the DHW demand.

7.6 Operation with room thermostat

The **Fusion Hybrid Gas Condens R** module **Avanttia NG** boiler includes a connection prepared for the installation of a room chronothermostat or ambient room thermostat (see "Connection of the room thermostat"), which allows the management of the boiler's operation depending on the temperature inside your home. Optionally, **DOMUSA TEKNIK** offers a wide range of such devices in its product catalogue.

The installation of a room thermostat will optimise the installation's performance, adapting the heating and air conditioning to the requirements of your home and obtaining enhanced comfort. Additionally, if the thermostat allows the operating hours to be programmed (chronothermostat), it can adapt the system to the hours of use of the installation.

8 MENU INFO

The "*Menu Info*" shows information and counters of the module on the digital screen at any time.

8.1 Access to *"Menu Info"*

Follow the instructions below to access the "*Menu Info*".

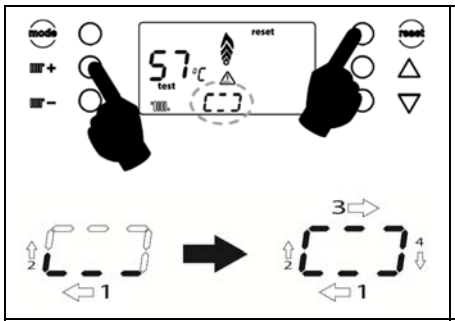	Press the buttons + and **RESET** simultaneously until the circle is completed.
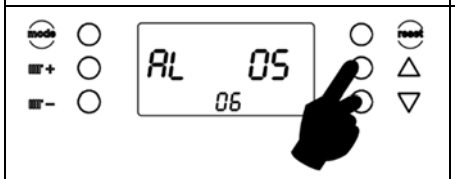	Navigate through the AL, In and Co parameters of the "Info Menu" with the DHW temperature adjustment buttons.
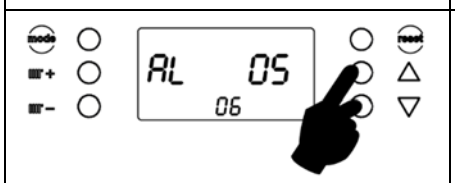	**AL 0 – AL 09**: Last 10 errors of the boiler.
	**In 0 – In 10**: Information about the boiler.
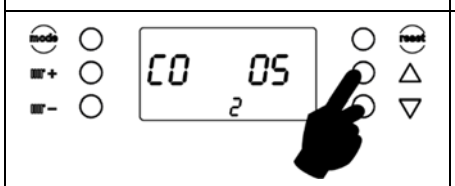	**Co 0 – Co 06**: Boiler counters.
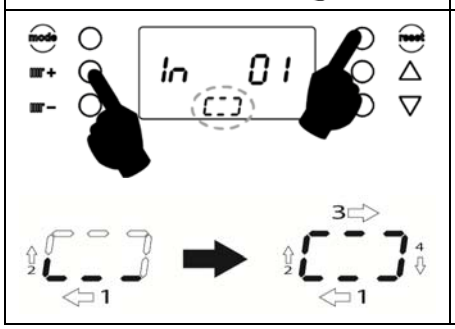	To exit the "*Menu Info*", press the buttons + and **RESET** simultaneously until the circle is completed.

8.2 "*Menu Info*" parameters

The following table shows the information and counters on the module status. The values shown on this menu cannot be modified.

No.	Parameter
AL 0 – AL 9	Last 10 errors of the boiler
In 1	Software version
In 2	Reserved
In 3	Heating sensor temperature (ºC)
In 4	Flue gas sensor temperature (ºC)
In 5	Reserved
In 6	Return sensor temperature (ºC)
In 7	Active boiler temperature setpoint (ºC)
In 8	Current power level (%)
In 9	Reserved
In 10	Water pressure sensor value (bar)
In 11	Current fan power (rpm x 100)
Co 1	Hours of boiler operation (h x 100)
Co 2	Hours of burner operation (h x 100)
Co 3	Number of burner ignitions (x 1000)
Co 4	Number of boiler alarms
Co 5	Number of activations of the "Technical Menu"
Co 6	Number of activations of the "SAT Menu"

9 TECHNICAL MENU

The electronic control of the **Fusion Hybid Gas Condens R** module has a menu of technical parameters, with which the operation of the module is managed. Any incorrect adjustment of any of these may cause a breakdown and/or rupture of the machine. Therefore, most parameters of the "**Technical Menu**" should only be modified by personnel authorised by **DOMUSA TEKNIK**. Nevertheless, some technical parameters will be useful for the installer and/or user, and should be adjusted by them, depending on the desired performance characteristics in the home.

9.1 Access to the "*Technical Menu*"

To access the "*Technical Menu*" parameters, follow the instructions below:

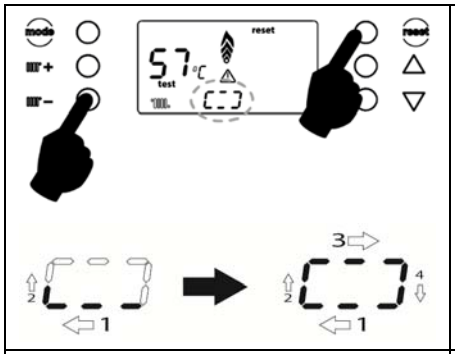	Press the buttons ▮▮▮▪ — and **RESET** simultaneously until the circle is completed.
	The display shows the parameter (01) and the value of the parameter (00). *Please note: Do not change this parameter*
	Browse through the "*Technical Menu*" parameters with the heating temperature adjustment buttons.
	Modify the parameter value using the DHW temperature adjustment buttons.
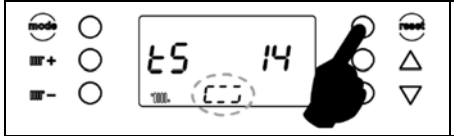	To save the value, press **RESET** until the circle is completed.
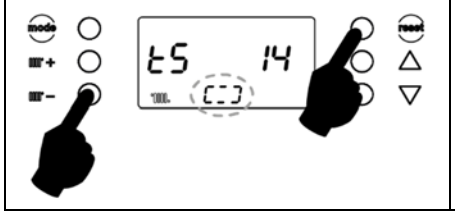	To exit the "*Technical Menu*", press the buttons ▮▮▮▪ — and **RESET** simultaneously until the circle is completed.

9.2 *"Technical Menu"* Parameters

The following is a list of parameters that can be adjusted by the installer and/or user. DOMUSA TEKNIK will not be held liable for any damage caused by an incorrect modification of these parameters by unauthorised personnel.

Nº.	Parameter	Range	
P01	*Reserved*	0 ~ 8	1
P02	Gas type	0 ~ 1	0
P04	K curve selection (10=1)	4 ~ 90	30
P05	Burner anti-cycling function	0 ~ 10	3
P06	*Reserved*	0 ~ 100 %	-
P07	*Reserved*	0 ~ 80	18
P08	Maximum heating power adjustment	10 ~ 100 %	80
P09	Maximum DHW power adjustment	10 ~ 100 %	100
P10	Minimum heating power adjustment	0 % ~ P08	0
P11	Minimum boiler setpoint temperature adjustment (ºC)	0ºC ~ P12	25
P12	Maximum boiler setpoint temperature adjustment (ºC)	P11 ~ 8ºC	85
P13	Maximum boiler setpoint temperature adjustment (ºC)	05 ~ 65ºC	65
P14	*Reserved*	0 ~ 20	0
P15	Boiler power selection	0 ~ 8	0
P16	*Reserved*	0 ~ 1	-
P17	*Reserved*	1 ~ 81	34
P18	*Reserved*	0 – 2	0
P19	*Reserved*	0 ~ 1	1
P20	Minimum DHW temperature (ºC)	10 – 50ºC	10
P21	Low temperature operation	0 ~ 1	0
P22	Gas removal length offset parameter (m)	1 ~ 10	1
P23	Cycled time for pump activation: zone (1/1 min.)	1 ~ 10	0
P24	Child protection	0 ~ 1	0
P25	Height offset parameter (1:100 m)	0 ~ 20	0
P26	Water hammer delay (s)	0 ~ 3	0
P28	Automatic display shut-down (s)	0 ~ 120	45
P31	*Reserved*	80 ~ 160	120 (GN) 120 (GLP)
P32	*Reserved*	P33 ~ 255	160 (GN) 148 (GLP)
P33	*Reserved*	30 ~ 60	32 (GN) 31 (GLP)
P34	*Reserved*	0 ~ 100	50
P35	*Reserved*	0 ~ 100	30

Nº.	Parameter	Range	
P36	*Reserved*	0 ~ 100	50
P37	*Reserved*	3 ~ 3	3
P38	Anti-frost activation temperature adjustment (ºC)	0 ~ 10	5
P39	Heating pump post-circulation (1=10 s)	0 ~ 99	18
P40	Heating activation delay after DHW (1 = 10 s)	0 ~ 60	12
P41	*Reserved*	0 ~ 1	0
P43	*Reserved*	0 ~ 30	0
P44	*Reserved*	0 ~ 1	1
P45	Anti-legionnaire's disease function (ºC)	54 / 55 ~ 80	54
P46	*Reserved*	0 ~ 1	1
P47	ΔTime between heating flow and return for pump modulation	10 ~ 40	20
P48	Pump operation mode	0 ~ 1	0
P49	*Reserved*	0 ~ 99	0

10 HEATING CIRCUIT ADJUSTMENTS

The **Fusion Hybrid Gas Condens R** module is equipped with an electronic control for efficiently regulating the automatic functioning of the module. It also has the following additional control features:

10.1 Heating power adjustment:

The **Fusion Hybrid Gas Condens R** module is configured to modulate between minimum and maximum burner power. Parameters **P08** and **P10** may be used to adjust the minimum and maximum heating power.

10.2 Adjustment of the maximum module setpoint temperature

Parameter **P.12** can be used to adjust the maximum heating setpoint temperature (80ºC by default) to adjust it to the characteristics of each particular installation, optimising the system's energy efficiency.

10.3 Circulating pump functioning

By default, the module is programmed for the circulating pump to continue functioning for 3 minutes when there is no further heating demand. Notwithstanding, this time can be modified using parameter **P39**, between 3 and 16 minutes.

The recirculating pump operating mode can also be changed using parameter **P48**. The operating modes are as follows:

1: Standard: The circulation pump is activated when the heating demand is enabled and remains active until the end of the post-circulation time.

2: Continuous: The circulation pump, remains activated with the 3-way valve in the heating position. If the DHW demand is enabled, the 3-way valve switches to the DHW position, and the circulation pump remains active until the end of the post-circulation time.

10.4 Low temperature operation

Parameter **P21** can be used to activate the low temperature operation, in order to limit the maximum heating set point temperature.

P21 = 0: The value 0 is selected so that the radiator systems operate by default at high temperatures.

P21 = 1: This parameter must be set to 1 for underfloor or heating systems operating at low temperatures. In this position, the maximum heating temperature is 47ºC.

11 DHW CIRCUIT ADJUSTMENTS

11.1 DHW power adjustment

The **Fusion Hybrid Gas Condens R** module is configured to modulate between minimum and maximum burner power. Parameter **P09** can be used to adjust the maximum power of the DHW service.

12 ADDITIONAL FUNCTIONS

The **Fusion Hybrid Gas Condens R** module includes the following additional control functions:

12.1 Burner anti-cycling functioning

Parameter **P05** is used to adjust the minimum interval between burner start-ups. It is used in installations with very low thermal inertia, to prevent excessively consecutive burner ignition and extinction cycles, ensuring smoother burner functioning and avoiding premature wear to the burner components.

12.2 Pump anti-block function

This function prevents the module circulation pumps from seizing up if they have been out of use for a long period. This system remains enabled while the module is plugged into the mains.

12.3 Anti-frost function

This function protects the module from freezing up during cold weather. The circulation pump will be activated when the module temperature drops below 7ºC. If the module temperature continues to drop and reaches 5 ºC, the burner will start up, heating the installation. This system remains on standby while the module is plugged into the mains. The activation temperature of the anti-frost protection can be modified through parameter **P38**..

During SHORT periods of absence, particularly in winter and in areas with a high risk of freezing weather, it is recommended NOT to disconnect the module from the electrical mains or the gas supply, in order to keep the anti-frost function active and prevent possible bursts due to the water in the pipes freezing.

12.4 Child protection

When this function is activated, the buttons are locked after 2 minutes have elapsed since their last use. When this function is enabled through parameter **P24**, the settings of the module can not be modified. The lock is deactivated by holding the **MODE** button until the cycle has finished.

P24=0: Child protection disabled.

P24=1: Child protection enabled.

12.5 Module pressure sensor function

This function prevents module failure caused by a low water level and/or excess pressure in the module. The pressure is detected by a pressure sensor, and its value is displayed on the digital display (**49. Digital pressure gauge**). If the pressure drops below 0.05 MPa (0.5 bar), the electronic control switches off for the module and triggers an alarm on the display ("**E02**"). If the module pressure exceeds than 0.27 MPa (2.7 bar), an alarm is triggered on the display ("**E03**"), warning of excess pressure. In this case, it is advisable to contact the nearest **Technical Assistance Service** and proceed to emptying the module until the pressure is between 0.1 and 0.15 MPa (1 and 1.5 bar).

12.6 Air purge function

The air purge function is activated by pressing and holding the **RESET** buttons and − until the circle is completed while the module is OFF. After activation of this function, the pump and 3-way valve are activated and deactivated to drain the air from the installation.

WARNING

This procedure must be performed by authorised personnel of **DOMUSA TEKNIK**.

Make sure that the pressure in the module is adequate and that the automatic drain cover is open. If the water pressure decreases during the purge procedure, use the fill valve to fill the installation until the pressure is adequate.

	The module must be in the OFF mode to perform the purge procedure.
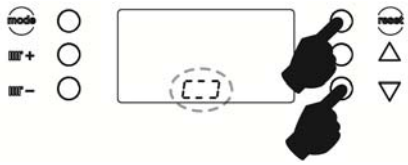	Press **RESET** and − simultaneously to complete the circle and perform the purge procedure.
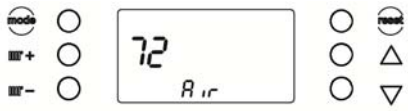	The "Air" mode appears on the display. The module starts the purge function. During this procedure, the pump and 3-way valve are activated/deactivated to eliminate air from the hydraulic system. The purge function ends in 12 minutes.
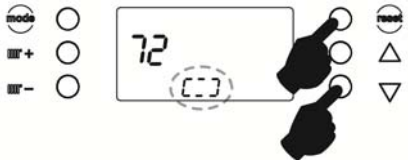	To exit the purge mode, wait for the 12 minutes of the function lasts or press **RESET** and − simultaneously until the circle is completed.

12.7 Service Mode

The **Fusion Hybrid Gas Condens R** module includes a service mode that allows testing its minimum and maximum power.

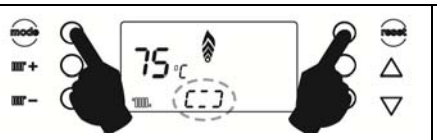	Press the **MODE** and **RESET** buttons simultaneously until the circle is completed to set the module in the test mode.
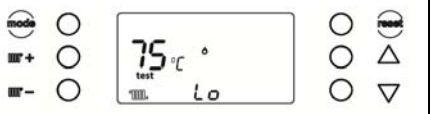	The module is set in the test mode. The **test** icon is displayed on the screen. The "Lo" symbol indicates that the module is at minimum power.
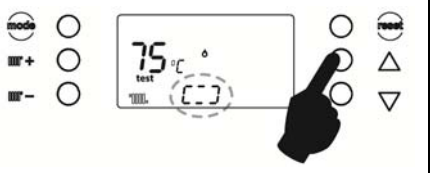	Press + until the circle is completed to switch to full power.
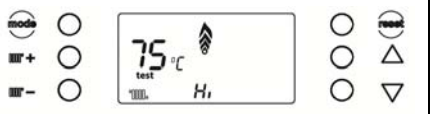	The **Hi** symbol indicates that the module is at maximum power.
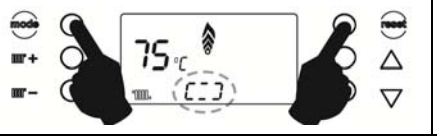	Press the **MODE** and **RESET** buttons simultaneously until the circle is completed to exit the test mode.

The test mode ends at 30 minutes. After this time, the module returns to the normal mode automatically.

12.8 Connecting the room thermostat ("AUTO" mode)

The **Fusion Hybrid Gas Condens R** module is prepared for the connection of up to 2 room programmable thermostats or room thermostats (see "Connection Diagram"), which will activate or stop the heating and/or cooling service of the heating/air-conditioning installation, turning off the heat pump and the supporting module when the desired temperature is reached in the home and turning it on when it comes down again.

Connecting terminals **30** and **32**, will activate and deactivate the Cooling mode, and connecting terminals **30** and **31** of the terminal strip (see "Electrical Diagram") will activate and deactivate the Heating mode, so that the operating modes of the heating/air-conditioning system will be remotely and automatically managed ("AUTO" mode), from the place where the installed room thermostats are located.

Terminals **30**, **31** and **32** are supplied from the factory with a jumper wire connected to each of them, so, irrespective of the configuration of thermostats to be installed, it will be necessary to remove both jumper wires before connecting the room thermostats.

Depending on the types of thermostats used or their combination, up to 3 types of room thermostat configurations can be installed. The following sections describe in detail the operation and installation of each of these configurations.

DANGER When handling the electrical installation, make sure that both the module and the DUAL CLIMA R heat pump are disconnected from the mains.

Connecting a switched thermostat for Heating/Cooling with 3 wires ("AUTO" mode)

In addition to selecting the desired temperature and periods of operation, this type of thermostat, if it is of the programmable thermostat type, offers users the possibility of selecting the mode of operation (Heating ☀/Cooling ❄) in the thermostat itself.

For its operation, this type of thermostat has 3 communication wires: one for the activation signal of the Heating mode, one for the activation signal of the Cooling mode, and one for the common signal. Depending on the status of each of the signals, the **DUAL CLIMA R** heat pump will manage the Heating/Cooling operating modes as follows:

Heating mode	Cooling mode	OFF (Stand By) (temp. reached)
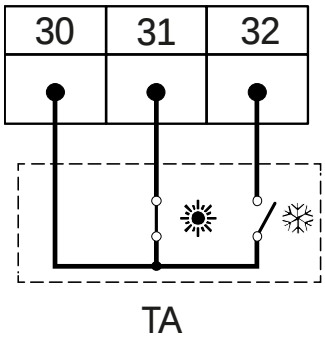	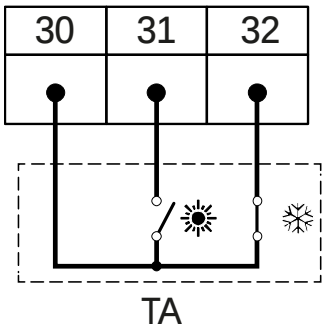	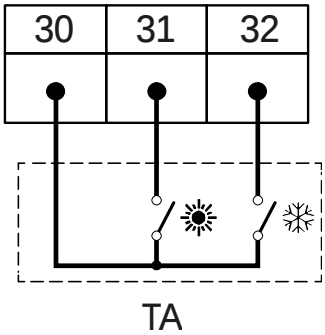

Terminals **30**, **31** and **32** are supplied from the factory with a jumper wire connected to each of them, so in order to install this type of thermostat, it will be necessary to remove both jumper wires and connect the thermostat as described in the following figure:

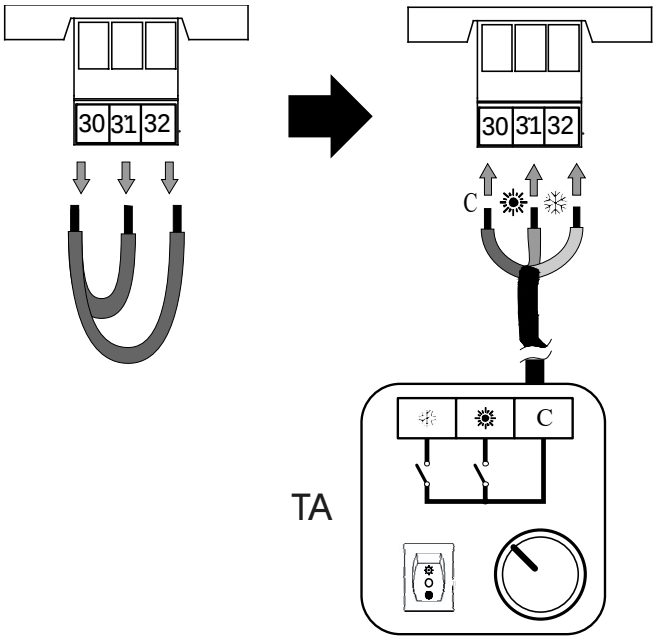

⚠ DANGER When handling the electrical installation, make sure that both the module and the DUAL CLIMA R heat pump are disconnected from the mains.

Connecting the two room thermostats

In this type of configuration, two single room thermostats will be connected, one in terminals **30** and **32** (TAF Cooling thermostat) and one in terminals **30** and **31** (**TAC** Heating thermostat). Each of them manages a different operating mode, so each thermostat must be of a type compatible with the operation for which it has been installed. The thermostat connected to the cooling input (**TAF**) should demand (closed circuit signal) when the room temperature is higher than the desired temperature (setpoint temperature), and in turn, the thermostat connected to the heating input (**TAC**) should demand (closed circuit signal) when the room temperature is lower than the desired temperature (setpoint temperature).

The **DUAL CLIMA R** heat pump activates the Heating/Cooling operating modes according to the status of the signal received from each thermostat, as follows:

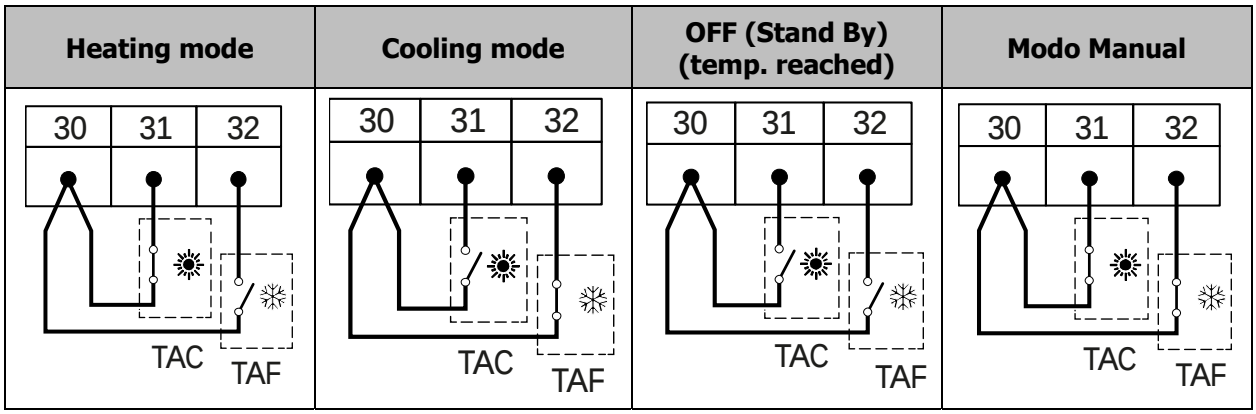

As indicated in the figure, if the setpoint temperatures of the room thermostats are selected in such a way that both require simultaneous operation, the electronic control of the heat pump will start to operate in "Manual" mode, that is, the Heating/ Cooling Operating modes must be selected manually from the control panel. To avoid this situation, it is essential to **make sure to correctly select the temperatures of each of them, in such a way that they do not cross and to avoid that both thermostats are activated at the same time**.

Terminals **30**, **31** y **32** are supplied from the factory with a jumper wire connected to each of them, so in order to install the thermostats, it will be necessary to remove **both** jumper wires and connect the thermostats as described in the following figure:

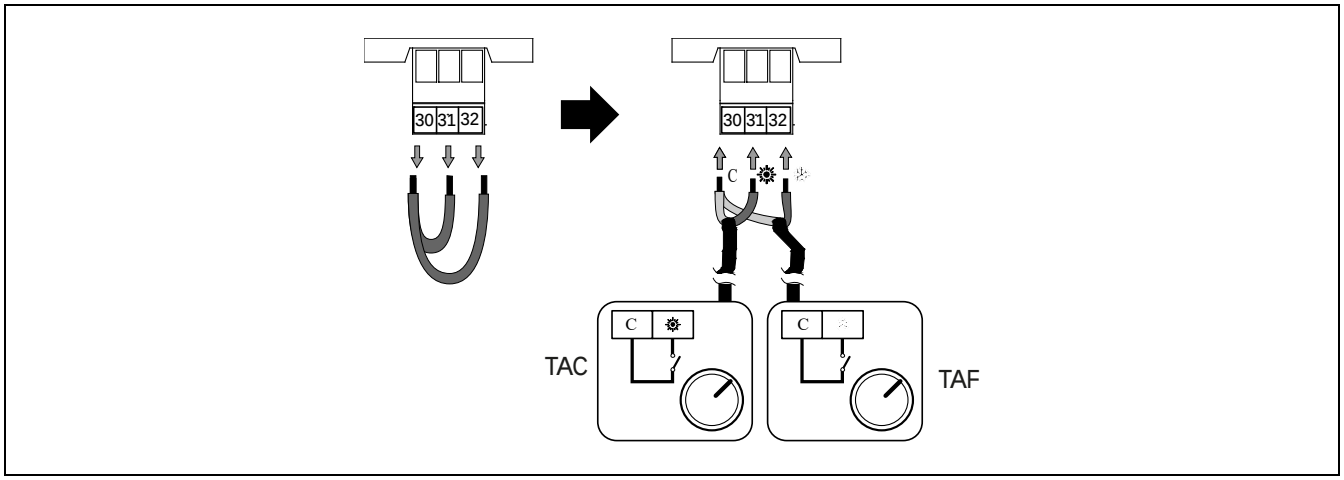

DANGER When handling the electrical installation, make sure that both the module and the DUAL CLIMA R heat pump are disconnected from the mains.

Connecting the room thermostat

In this type of configuration, a single room thermostat will be connected in inputs **30** and **32** (**TAF** Cooling thermostat) or in inputs **30** y **31** (**TAC** Heating thermostat). For this room thermostat management configuration to work correctly, the heat pump should be configured for **a single** operating mode, that is, Heating or Cooling (see "Heat pump configuration") in the manual of the **DUAL CLIMA R** heat pump. Depending on the input to which the thermostat is connected, it will manage the corresponding mode of operation, and the type of room thermostat must be prepared for this purpose. The thermostat connected to the cooling input (**TAF**) should demand (closed circuit signal) when the room temperature is higher than the desired temperature (setpoint temperature), and in turn, the thermostat connected to the heating input (**TAC**) should demand (closed circuit signal) when the room temperature is lower than the desired temperature (setpoint temperature).

Terminals **30**, **31** and **32** are supplied from the factory with a jumper wire connected to each of them, so in order to install this type of thermostat, it will be necessary to remove **both** jumper wires and connect the thermostat as described in the following figure, depending on the mode to be managed:

Heatin thermostat (Heating Mode)

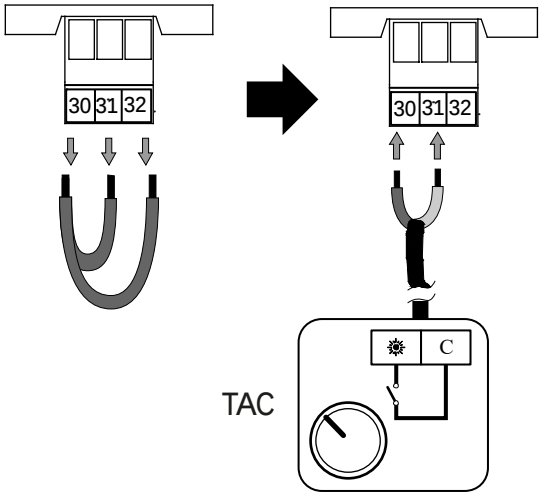

Cooling thermostat (Cooling Mode)

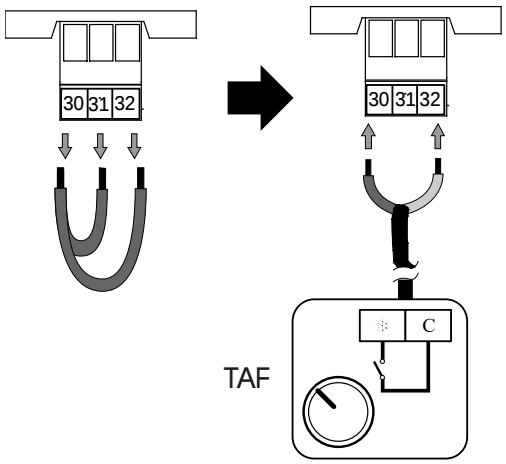

DANGER **When handling the electrical installation, make sure that both the module and the DUAL CLIMA R heat pump are disconnected from the mains.**

12.9 Reset default values of fan parameters

In case of incorrect adjustment of the fan, the original values of the parameters related to the fan setting can be restored.

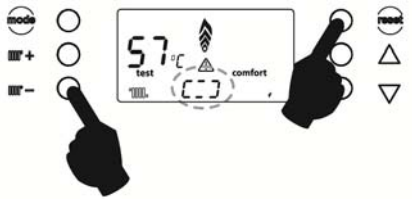	Press the buttons ▮▮▮▪ — and **RESET** simultaneously until the circle is completed to access the "Technical Menu".
	Select parameter **P15**.
	Increase the default number of the module. *Warning: This value varies in each module model.*
	Press **RESET** until the circle is completed to register the value.
	Wait 60 seconds.
	Restore the value of parameter **P15**.
	Press **RESET** until the circle is completed to register the value.
	**WARNING**! Select parameter **P01**.
	Select value of parameter **P01=01**.

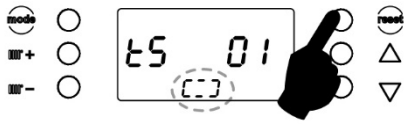	Press **RESET** until the circle is completed to register the value.
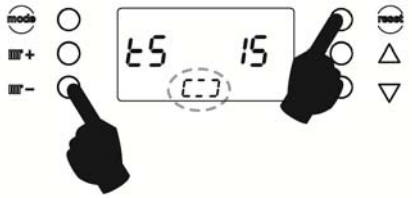	Press — and **RESET** simultaneously until the circle is completed to exit the "*Technical Menu*". The default values are restored.

13 SHUTTING DOWN THE MODULE

In the **Off mode, while the boiler is plugged into the mains and connected to the fuel installation**, its heating and DHW functions will be switched off but the anti-frost protection and pump anti-block functions will remain activated.

As shown in the following sequence, to turn off the module, press the **MODE** button until the circle is completed twice.

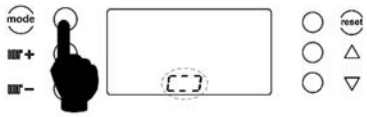	Press the **MODE** button until the circle is completed.
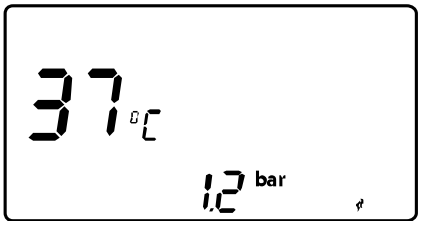	Once the radiator in the display (*31 Heating mode operation display*) disapears, , it is necessary to press the MODE button one more time.
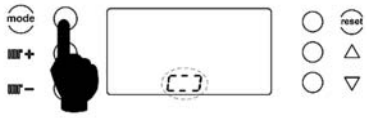	Press the **MODE** button until the circle is completed.
	The module goes into the off mode.

To shut down the module functioning completely, unplug it from the mains and cut off the fuel supply.

14 DRAINING THE MODULE

The water is drained from the module by opening the air drain valve ***(19)***, located inside the module on the lower left hand side of the heat exchanger. Connect a flexible tube to this valve and run it to a drain. After draining the module, close the valve again and remove the flexible tube.

Important **During the draining process, it is recommended to switch off the module and disconnect it from the mains.**

15 SAFETY INTERLOCKS

The module's electronic control system may activate the following safety interlocks to stop the module's operation. When any of these interlocks occurs, the module stops working and an interlock code appears on the display.

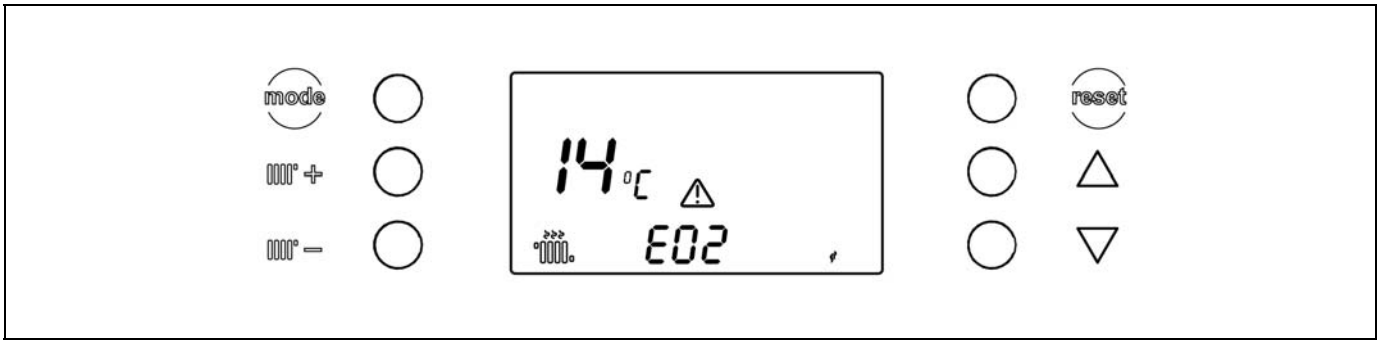

Important **If any of the following operating interlocks are repetitive, turn off the module and contact nearest official SAT.**

15.1 Temperature safety interlock

When this interlock occurs, the code "**E07**" and the error indicator symbol appear on the display. The burner will switch off and stop heating the installation.

This occurs when the module exceeds a temperature of 100ºC. To unlock it, wait until the module temperature drops to 85ºC and press the **RESET** button.

15.2 Burner interlock

When this interlock occurs, the code "**E06**" and the error indicator symbol appear on the display. The burner will switch off and stop heating the installation.

This occurs as a result of an anomaly in the burner or in the fuel installation. To unlock, press the **RESET** button.

15.3 Low pressure interlock

When this interlock occurs, the code "**E02**" and the error indicator symbol appear on the display. The burner and the module circulation pump will switch off, cutting off the heating and water flow to the installation.

This occurs when the module pressure drops to below 0.05 MPa (0.5 bar), preventing the module from functioning when the water is drained from the installation, due to either leakage or maintenance operations. To unlock, press the **RESET** button.

16 MODULE MAINTENANCE

To maintain the model in perfect working order, a yearly service should be performed by personnel authorised by **DOMUSA TEKNIK**.

Module and flue maintenance

The most important aspects to be checked are as follows:

- The water pressure in the heating installation, **when the water is cold**, must be between 0.1 and 0.15 MPa (1 and 1.5 bar). If it is not between these values, it must be filled until they are reached.
- The control and safety devices (thermostats, gas valve, etc.) must operate correctly.
- The burner and the inside of the combustion chamber must be clean. Soft brushes or compressed air are recommended for cleaning the module, to prevent damage. **Do not use chemical products**.
- The expansion vessel must be full, in accordance with the specifications on the vessel plate.
- Check the gas and water installations are completely sealed.
- The flues must be free of any obstacles and have no leaks.
- The gas flow must remain between the values indicated on the ***Technical Data Sheet.***
- The circulating pumps and mixer valves must not be blocked.

Cleaning the burner and combustion chamber

The module does not require any special maintenance. A **yearly cleaning procedure** at the end of the heating season will be enough. **The combustion chamber and burner should not be cleaned using chemical products or steel brushes**. After any cleaning operation has been carried out, it is important to run several ignition cycles to check all the elements are operating correctly.

After checking the module is functioning correctly, ensure there are no leaks.

Draining the condensation water

The module condensation water drain outlet should not be altered in any way and it must be kept free of obstructions. It is advisable to perform an annual cleaning procedure of the condensation collection siphon.

If a neutralisation system is installed at the condensation drain outlet, it should undergo periodical maintenance, in accordance with the manufacturer's instructions.

Cleaning products

Never use chemical products to clean the module. A plastic brush is enough, if the cleaning is carried out annually.

The cleaning of the module and hydraulic circuit will have lasting effects if water with a hardness of over 25ºF is treated previously. For softer water no treatment is required. In any case, a descaling pump should be used to carry out the descaling process.

Anti-frost protection

The module **Fusion Hybrid Gas Condens R** has a function for preventing frost damage to the installation. This will function as long as the appliance remains plugged into the mains. Despite this

function, and particularly in areas with very cold weather, we recommend taking precautions in order to prevent damage to the module. It is advisable to add anti-freeze to the water in the heating circuit. If the module is to be out of use for long periods of time, we recommend **draining all the water from the module**.

Water characteristics

In areas with water hardness of over 25-30ºF, treated water must be used in the heating installation to avoid any scale deposits on the module.

It should be noted that even a few millimetres of scale will greatly reduce the boiler's heat conductivity, causing a major drop in performance.

Treated water must be used in the heating circuit in the following cases:

- Very large circuits (containing a large amount of water).
- Frequent filling of the installation.

If repeated partial or total draining of the installation is necessary, we recommend filling it with treated water.

17 COMBUSTION ADJUSTMENT

The module combustion adjustment must be carried out by the Official Technical Assistance Services of **DOMUSA TEKNIK**. Any operation performed on the parameters related to combustion, without considering this section of the manual, may cause damage to people, the module and the installation. **DOMUSA TEKNIK** will hold no liability for any damage caused by unsuitable handling of the power regulation elements carried out by personnel not authorised by the company.

As described on the plate, the module **Fusion Hybrid Gas Condens R** is adjusted by default to run on Natural Gas. In case of working with another type of gas, it will be necessary to replace the gas through parameter **P02** of the "*Technical Menu*" before regulating the boiler. (see "*Adapting to other gas types*").

17.1 Measurement values

When it is started up, check that the O2 value is within the values indicated in the table below. To do this, an operating mode is available that sets the minimum (Lo) and maximum (Hi) power of the boiler for a correct combustion test. (See "*Service Mode*").

Important **Make sure that the air intake pipe of the module is fully closed and that the sealing is ensured during calibration.**

NATURAL GAS (G20) 20mbar		**CO2 (%)**	**O2 (%)**
Maximum power	**Rated value**	9,0	4,8
P2: Hi	**Tolerance**	8,7 – 9,3	5,4 – 4,3
Ignition power	**Rated value**	9,0	4,9
P1	**Tolerance**	8,7 – 9,3	5,4 – 4,3
Minimum power	**Rated value**	9,1	4,8
P0: Lo	**Tolerance**	8,7 – 9,5	5,5 – 4,2

PROPANE GAS (G31) 37mbar		**CO2 (%)**	**O2 (%)**
Maximum power	**Rated value**	10,4	5,3
P2: Hi	**Tolerance**	10,0 – 10,5	5,9 – 5
Ignition power	**Rated value**	10,4	5,2
P1	**Tolerance**	10,0 – 10,5	5,9 – 5
Minimum power	**Rated value**	10,3	5,3
P0: Lo	**Tolerance**	10,0 – 10,5	5,9 – 5

Important **CO values must not exceed in all process 2%.**

If, after making the adjustment, the value obtained in the measurement deviates from the established range, check that the gas evacuation and air intake systems do not leak and or not communicating with each other.

After verifying that the installation, the gas evacuation system and the gas circuit comply with all requirements, the O2 value must be adjusted according to the following instructions:

17.2 Adjustment process

El valor de O2 se debe ajustar siguiendo las siguientes instrucciones.

Note **Make sure that the air intake pipe of the module is fully closed and that the sealing is ensured during calibration.**

Important **Make sure that all radiator valves are open during adjustment, or if necessary, the calibration process will be interrupted if the module reaches the maximum temperature limit.**

	Press the **MODE** and **RESET** buttons simultaneously until the circle is completed.
	After releasing the **MODE** and **RESET** buttons, press the button (▥ −) to adjust the heating temperature before 3 seconds have elapsed.
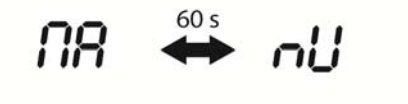	The letters **Ma-nu** will appear on the display for approximately 60 s. During this time, the module makes several ignitions. Do not touch the module and do not change gas pressure during this time.
	Once the module stabilises, the P0 value "Minimum power" will appear on the display. Check the O_2 level and use the navigation buttons so that the O_2 level is adjusted to the rated values indicated in the table of measurement values.
	Press the button to adjust the heating temperature (▥ +) until the circle is completed. The P0 value is registered, and the module will change its position to "Ignition power"
	Once the module stabilises, the P1 value "Ignition power" appears on the display. Check the O2 level and use the DHW temperature adjustment buttons so that the O2 level is adjusted to the rated values indicated in the table of measurement values.
	Press the button to adjust the heating temperature (▥ +) until the circle is completed. The P1 value is registered, and the module will change its position to "maximum power"
	Once the module stabilises, the P2 value "Maximum power" will appear on the display. Check the O2 level and use the navigation buttons so that the O2 level is adjusted to the rated values indicated in the table of measurement values.
	Press the **MODE** button until the circle is completed. The P2 value is registered and the module exits the manual calibration mode.

18 ADAPTING THE BOILER TO OTHER GAS TYPES

As described on the date plate, the module **Fusion Hybrid Gas Condens R** is adjusted by default to run on Natural Gas. In case of working with another type of gas, it will be necessary to change the gas.

To do this, access the "*Technical Menu*" and modify parameter **P02**.

	Press the buttons ▥ − and **RESET** simultaneously until the circle is completed to access the "*Technical Menu*".
	Select parameter **P02**.
	Select the parameter value **P02**.: Natural Gas: **P02 = 0** Propane Gas: **P02 = 1** Press **RESET** to save the entered value.
	Disconnect the module. Wait 20 seconds and reconnect it to confirm that the gas has been made changed.
	The screen displays the type of gas selected.

Important **Adapting the gas type must be carried out by a qualified professional, authorised by DOMUSA TEKNIK.**

Note **It is necessary to adjust the combustion after changing the gas.**

19 ELECTRODE POSITION

It is important that the electrode is properly located as indicated in the following images.

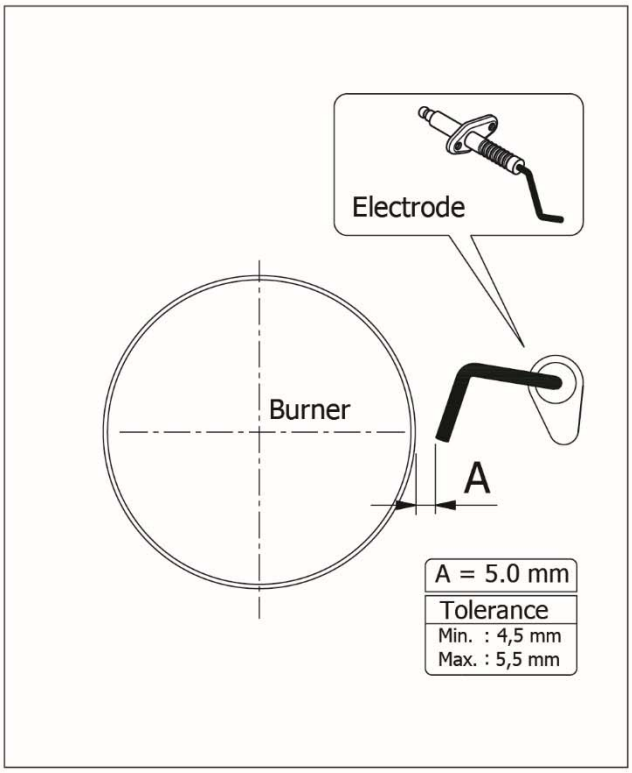

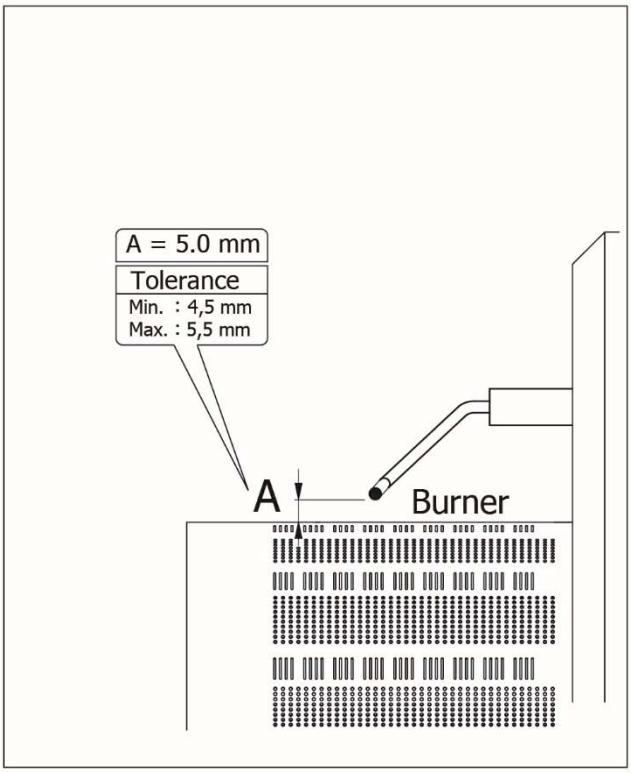

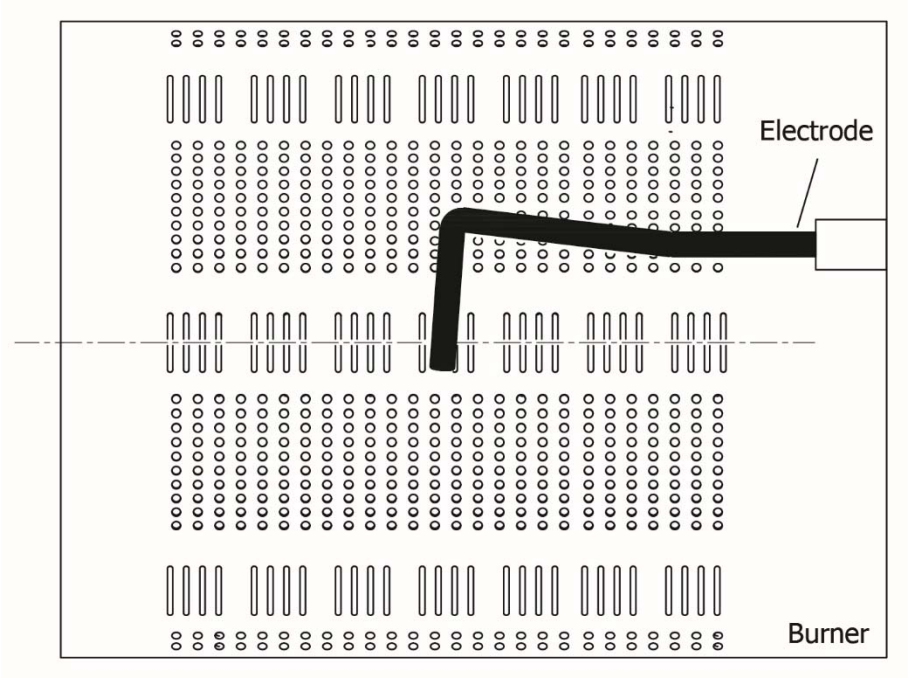

20 CIRCULATING PUMP FLOW CURVES FOR HEATING

20.1 Characteristic curves of the pump

Characteristics curve considering **Fusion Hybrid Gas Condens R** and **DUAL CLIMA R** heat pump.

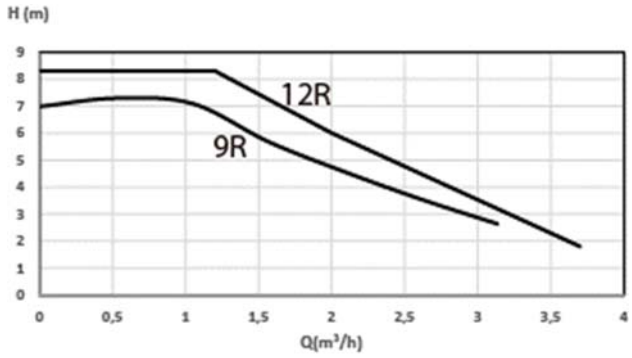

20.2 Pressure drop

Pressure drop considering Module **Fusion Hybrid Gas R** and **DUAL CLIMA R** heat pump.

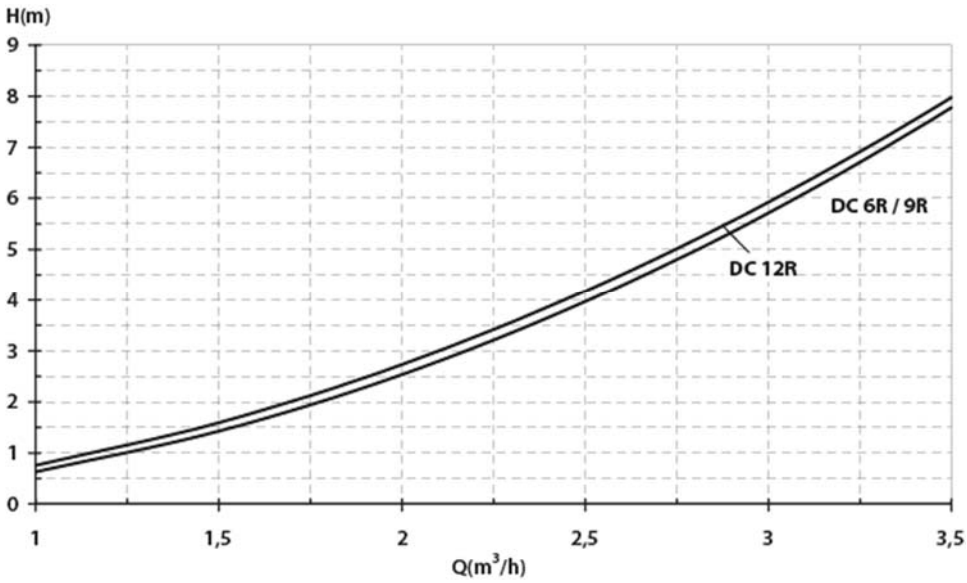

20.3 Operating status of the circulation pump

The high-efficiency pump includes a LED (light) around the red button for setting the operation, by means of which its operating status is shown. The following table describes these states:

LED	DESCRIPTION	STATUS	CAUSE	SOLUTION
It is lit green	The pump is operating	The pump operates according to its setting	Standard operation	
It flashes red/green	The pump is ready for service but is not functioning	The pump will start up again automatically once the error has been solved	Low voltage: U < 160 V Overvoltage: U > 253 V	Check the current supply: 195 V < U < 253 V
			Pump overheating: the engine temperature is too high	Check the room and fluid temperature
It flashes red	The pump is out of order	The pump is stopped	The pump does not start up automatically.	Replace the pump. Please contact your nearest official technical assistance service to have it replaced.
Off	There is no power supply	The pump receives no voltage	The pump is not connected to the power supply	Check the electrical connection
			The LED is faulty	Check if the pump is operating
			The electronic control of the pump is faulty	Replace the pump. Please contact your nearest official technical assistance service to have it replaced.

21 DIAGRAMS AND MEASUREMENTS

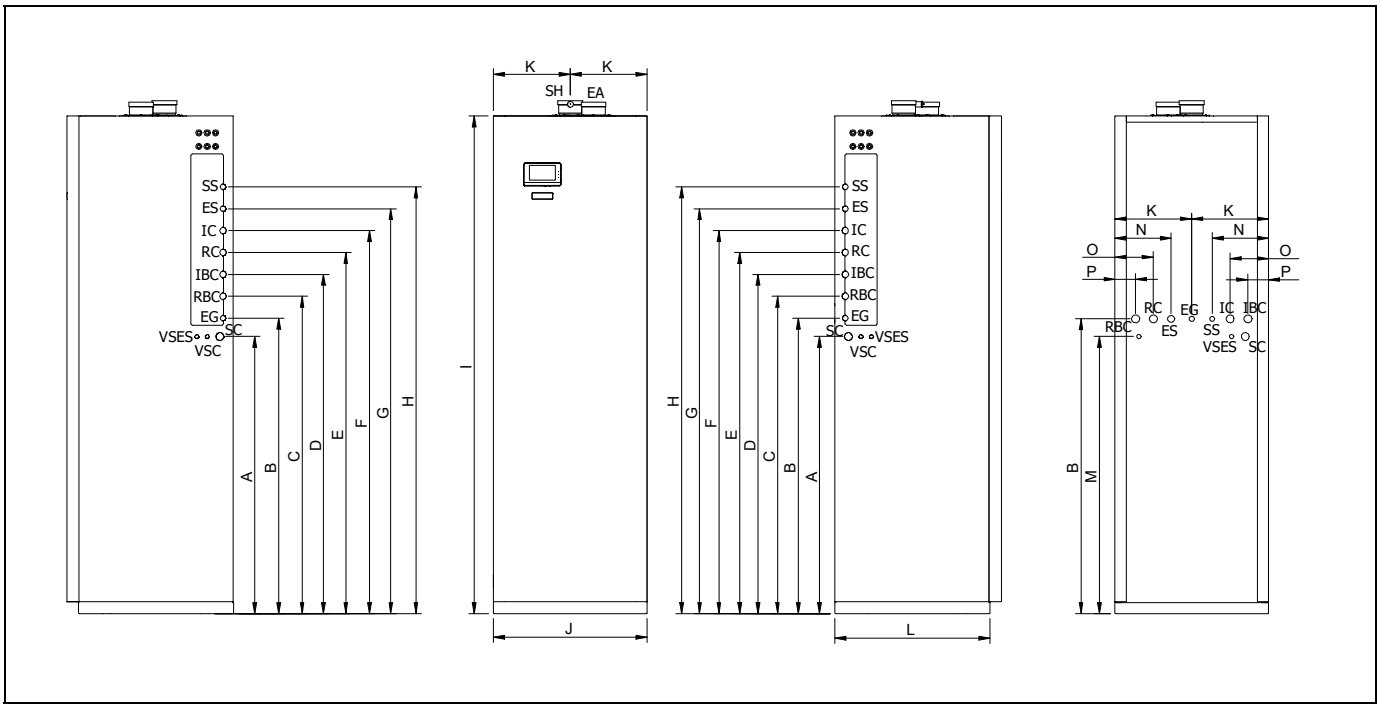

	Connection
IC: Direct circuit heating./ Air Conditioning Flow, Ø22	1" M
RC: Direct circuit heating / Air Conditioning Return, Ø22.	1" M
IBC: Heat pump flow, Ø22	1" M
RBC: Heat pump return, Ø22	1" M
EG: Gas inlet.	3/4" M
ES: Domestic cold water intake.	3/4" M
SS: Domestic hot water outlet.	3/4" M
VSES: DHW safety valve	-
VSC: Heating safety valve.	-
VC: Condensation outlet.	-
SH: Flue gas outlet	Ø80
EA: Air inlet	Ø80

FUSION HYBRID GAS CONDENS 24															
A	B	C	D	E	F	G	H	I	J	K	L	M	N	O	P
1010	1080	1160	1240	1320	1400	1480	1560	1820	560	280	610	1015	205	140	75
FUSION HYBRID GAS CONDENS 24/165															
A	B	C	D	E	F	G	H	I	J	K	L	M	N	O	P
1130	1200	1280	1360	1440	1520	1600	1680	1900	660	330	690	1125	255	190	75

22 TECHNICAL CHARACTERISTICS

	Unit	FUSION HYBRID GAS CONDENS 24R			FUSION HYBRID GAS CONDENS R 24R/165		
Code		**D9.24.HDX120**			**D9.24.HDX165**		
Boiler Type		**Condensing Heating and hot water production**					
Gas Circuit							
Gas Type		G20	G25	G31	G20	G25	G31
Gas Supply Pressure	mbar	20	25	37	20	25	37
Gas Consumption at Maximum	m³/h	2,49	2,83	0,96	2,49	2,83	0,96
Gas Consumption at Minimum	m³/h	0,36	0,43	0,14	0,36	0,43	0,14
Modulation Range		1:10			1:10		
Efficiency							
Gas Type		G20	G25	G31	G20	G25	G31
(80/60 °C) Efficiency at Maximum Heat Output	%	97,69	97,36	97,57	97,69	97,36	97,57
(50/30 °C) Efficiency at Maximum Heat Output	%	105,15	105,45	103,01	105,15	105,45	103,01
Efficiency at 30% load at 36/30 °C	%	108,0	107,70	105,81	108,0	107,70	105,81
Heating Circuit							
Gas Type		G20	G25	G31	G20	G25	G31
Maximum Heat Input (Qn) (PCI)	kW	24,3	24,3	24,3	24,3	24,3	24,3
Minimum Heat Input (Qn) (PCI)	kW	3,5	3,5	3,5	3,5	3,5	3,5
Maximum Heat Output (80/60 °C) (Pn)	kW	23,7	23,7	23,7	23,7	23,7	23,7
Minimum Heat Output (80/60 °C) (Pn)	kW	3,2	3,2	3,2	3,2	3,2	3,2
Maximum Heat Output (50/30 °C)	kW	25,3	25,3	25,0	25,3	25,3	25,0
Minimum Heat Output (50/30 °C)	kW	3,6	3,6	3,5	3,6	3,6	3,5
Temperature Selection Range (Heating)	ºC	25-80			25-80		
Operating Pressure (Maximum) (PMS)	bar	3			3		
Operating Pressure (Minimum)	bar	0,5			0,5		
Expansion Tank Useful Volume	L	8			8		
Domestic Hot Water Circuit							
Maximum DHW Heat Input	kW	28,8	28,8	27,7	31.1	31.1	31.1
Minimum DHW Heat Input	kW	3,5	3,5	3,5	3,5	3,5	3,5
Tank capacity	l	120			165		
Maximum Water Pressure	bar	7			7		
Temperature Adjustment Range	ºC	10-65			10-65		
Electricity Circuit							
Electricity Supply		230 V +%10; -%15			230 V +%10; -%15		
Electricity Consumption (Max./Min.)	watt	95/55			95/55		
Protection index		IP20			IP20		

	Unit	FUSION HYBRID GAS CONDENS 24R			FUSION HYBRID GAS CONDENS R 24R/165		
Code		**D9.24.HDX120**			**D9.24.HDX165**		
Exhaust Gas Circuit							
Gas Type		G20	G25	G31	G20	G25	G31
Maximum flue Temperature	ºC	78			78		
Overheat securty flue Temperature	ºC	100			100		
NOx		6			6		
Weighted Value of Nox	mg/kWh	40	44	46	40	44	46
Flue Mass Flow Rate (60/80°C - Qn) Nominal/Minimum	g/s	10,32/1,6	10,78/1,62	9,91/1,18	10,32/1,6	10,78/1,62	9,91/1,18
Flue Mass Flow Rate DHW (60/80 ºC-Qn) (Nominal/Minimum)	g/s	14,01	14,04	12,71	14,01	14,04	12,71
General							
Dimensions	mm	560 x 610 x 1820			660 x 690 x 1900		
Net Weight	Kg.	195			220		
Type		B23, B23P, B33, C13, C33, C53, C63, C83, C93			B23, B23P, B33, C13, C33, C53, C63, C83, C93		
Category		I2H, I2E+, I2E (S), I2L, I3P, II2H3P, II2L3P, II2E+3P			I2H, I2E+, I2E (S), I2L, I3P, II2H3P, II2L3P, II2E+3P		

23 ELECTRICAL DIAGRAM

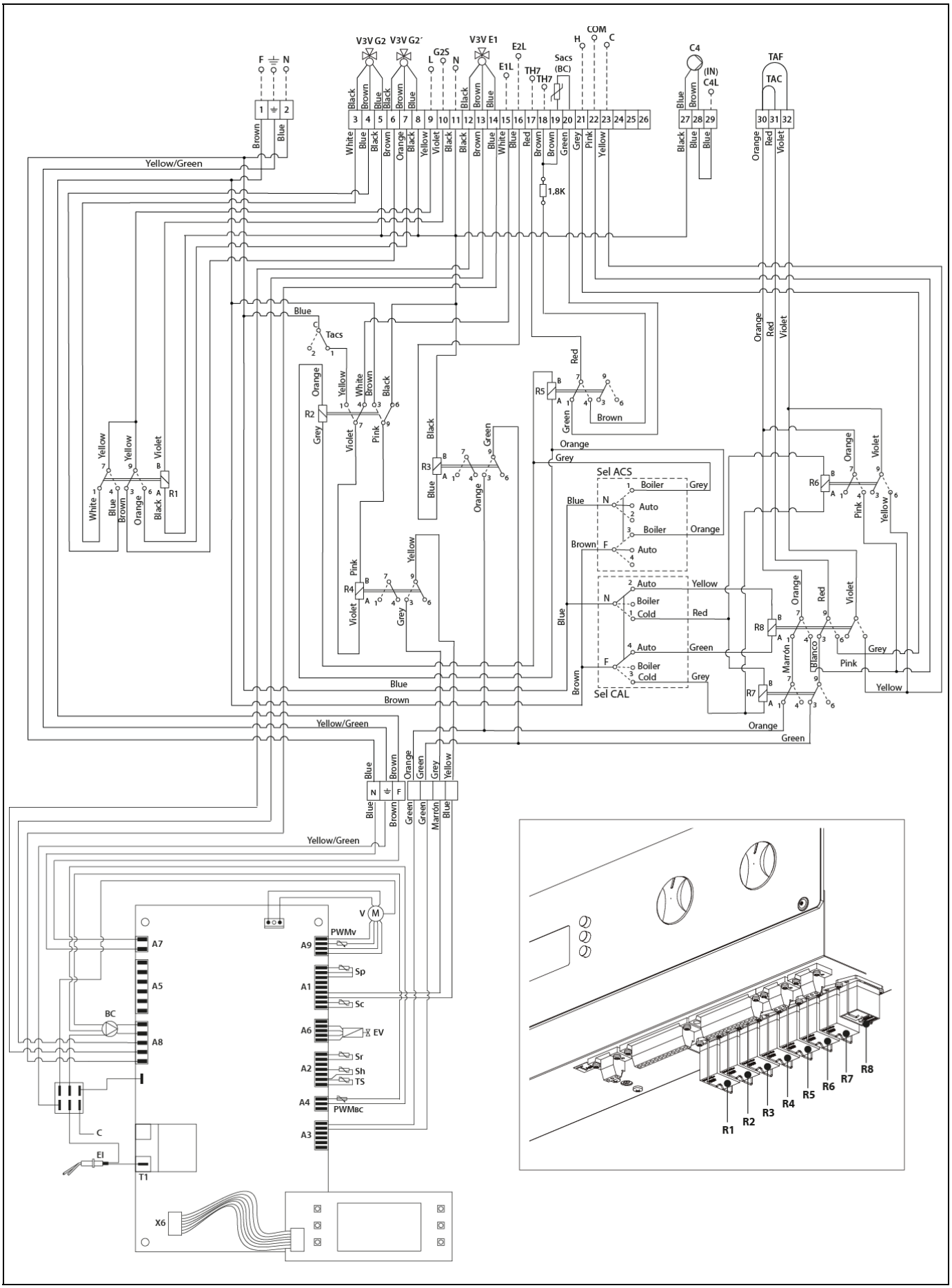

Components of Fusion Hybrid Gas Condens R module

V: Fan.

BC: Circulation pump.

C: Module ground connection.

EI: Ionization electrode.

PWMV: Fan PWM cable.

Sp: Water pressure sensor.

Sc: Heating sensor.

EV: Gas valve.

Sr: Return sensor.

Sh: Flue gas sensor.

TS: Safety thermostat.

PWMBC: PWM cable for circulation pump.

V3V G2: Heating/DHW 3-way valve.

V3V G2´: Heating/DHW 3-way valve.

V3V E1: Heating/DHW supporting 3-way valve.

Tacs: DHW storage tank thermostat.

R: Relay.

Sel ACS: DHW selector.

Sel CAL: Heating selector.

C4: Support pump.

Connections in module

F: Live.

N: Neutral.

TAF: Cooling Room Thermostat.

TAC: Heating Room Thermostat.

Connections in module, between module and DUAL CLIMA R heat pump

L: Heat Pump Live Wire.

G2S: Heat Pump "G2S" connection.

N: Heat Pump Neutral.

E1L: "E1L" connection of heat pump DHW supporting connection.

E2L: "E2L" connection of heat pump. Heating supporting connection.

TH7: Input signal from the DHW probe to the heat pump.

Sacs (BC): DHW temperature probe.

C: "C" connection in heat pump. Input signal from the cooling room thermostat to the heat pump.

H: "H" connection in heat pump. Input signal from the heating room thermostat to the heat pump.

COM: "COM" connection in heat pump Input signal from the common room thermostat to the heat pump.

C4L (IN): "C4L" connection in heat pump. Input signal of support circulation pump.

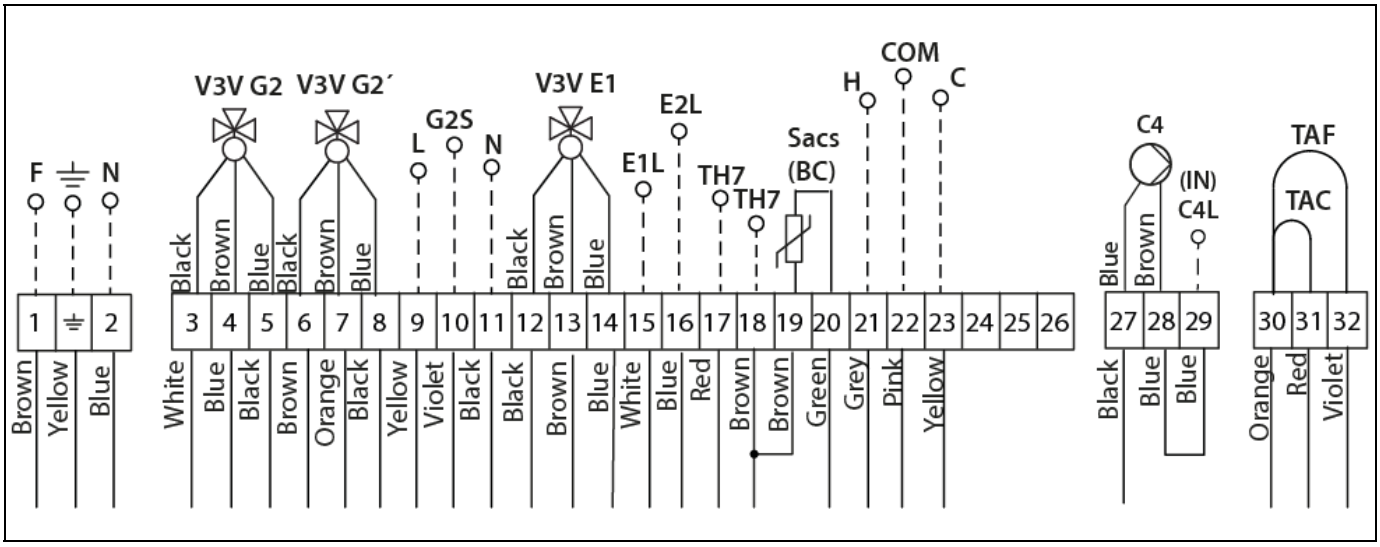
F
N
V3V G2
V3V G2´
G2S
L
N
V3V E1
E2L
E1L
TH7
TH7
Sacs
(BC)
H
COM
C
C4
(IN)
C4L
TAF
TAC
1 2 3 4 5 6 7 8 9 10 11 12 13 14 15 16 17 18 19 20 21 22 23 24 25 26
27 28 29
30 31 32
Brown Yellow Blue
White Blue Black Brown Orange Black Yellow Violet Black Black Brown Blue White Blue Red Brown Brown Green Grey Pink Yellow
Black Brown Blue Black Brown Blue Black Brown Blue
Blue Brown
Black Blue Blue
Orange Red Violet

24 ALARM CODES

The module **Fusion Hybrid Gas Condens R** has an electronic circuit which performs continuous self-testing to detect any malfunctioning in the module. When the electronic control detects malfunctioning, this is indicated by an alarm code flashing on the digital display. The table below shows a list of the alarm codes that may appear:

Code	Cause	Solution
E 02	Low water pressure	Increase pressure through the drain valve Contact SAT if the error persists
E 03	High water pressure	Reduce pressure through the drain valve Contact SAT if the error persists
E 05	DHW temperature sensor failure	Press RESET. Contact SAT if the error persists
E 06	Heating flow sensor failure	Press RESET. Contact SAT if the error persists
E 07	Ignition failure	Press RESET. Contact SAT if the error persists
E 08	Safety thermostat error	Press RESET. Contact SAT if the error persists
E 09	False flame error	Press RESET. Contact SAT if the error persists
E 11	Water circulation failure	Press RESET. Contact SAT if the error persists
E 12	Gas valve modulator failure	Press RESET. Contact SAT if the error persists
E 13	DHW temperature Probe, in storage tank mode, fault	Press RESET. Contact SAT if the error persists
E 14	Flue gas outlet overheating	Press RESET. Contact SAT if the error persists
E 15	Flue gas temperature sensor failure	Press RESET. Contact SAT if the error persists
E 16	Fan error	Press RESET. Contact SAT if the error persists
E 17	Heating return sensor failure	Press RESET. Contact SAT if the error persists
E 20	Difference in heating sensor temperature	Press RESET. Contact SAT if the error persists
E 21	Flow meter failure	Press RESET. Contact SAT if the error persists
E 28	Excess of heating temperature	Press RESET. Contact SAT if the error persists
E 37	Heater outlet and return temperature difference > TSP 82°C	Press RESET. Contact SAT if the error persists
E 40	Maximum number of unlocks reached	Disconnect the boiler from the mains, connect and press RESET. Contact SAT if the error persists.
E 41	Insufficient mains voltage error	The error disappears when the mains voltage is appropriate. Contact SAT if the error persists.
E 42	Electric frequency fluctuation	The error disappears when the electrical frequency is appropriate. Contact SAT if the error persists.
E 44	Flame error after 6 ignitions	Disconnect the boiler from the mains, connect and press RESET. Contact SAT if the error persists.
E 62	Panel button failure.	Press RESET. Contact SAT if the error persists.
E 72	Open therm communication error	Press RESET. Contact SAT if the error persists.

Code	Cause	Solution
E 77	Error for excess valve opening time without flame.	Disconnect the boiler from the mains, connect and press RESET. Contact SAT if the error persists.
E 78	Adjustment error.	Adjust the boiler's gas valve. Press RESET. Contact SAT if the error persists
E 79	ΔT error due to ignition failure	Contact SAT
E 80	Absolute values of current reached	Disconnect the boiler from the mains, connect and press RESET. Contact SAT if the error persists.
E 81	Maximum adjustment values reached	Disconnect the boiler from the mains, connect and press RESET. Contact SAT if the error persists.
E 84	Regulating minimum value reached	Disconnect the boiler from the mains, connect and press RESET. Contact SAT if the error persists.
E 87	Gas valve error	Disconnect the boiler from the mains, connect and press RESET. Contact SAT if the error persists.
E 88	First attempt ignition error	Press RESET. Contact SAT if the error persists.
E 89	Gas inlet pressure error.	Press RESET. Contact SAT if the error persists.
E 90	Gas valve circuit problem	Press RESET. Contact SAT if the error persists.
E 92	Gas valve management error	Press RESET. Contact SAT if the error persists.
E 93	Combustion signal problems	Press RESET. Contact SAT if the error persists.
E 94	Inability to regulate combustion	Press RESET. Contact SAT if the error persists.
E 95	Air compensation active	Press RESET. Contact SAT if the error persists.
E 96	Inability to regulate combustion (temporarily)	Press RESET. Contact SAT if the error persists.
E 98	Possible low gas pressure or exhaust gas recirculation	Press RESET. Contact SAT if the error persists.
E 99	Intermittent combustion value	Press RESET. Contact SAT if the error persists.

Note **It will be very useful for the technical assistance service if you can inform them about the alarm code that has appeared on the call-out.**

NOTES:

NOTES:

POSTAL ADDRES
Apartado 95
20730 AZPEITIA
Telf: (+34) 943 813 899

FACTORY & OFFICES
Bº San Esteban s/n
20737 ERREZIL (Gipuzkoa) SPAIN
Fax: (+34) 943 815 666

CDOC002474 25/08/21

www.domusateknik.com