INSTALLATION AND OPERATING INSTRUCTIONS

↳ FUSION HYBRID OIL MODULE

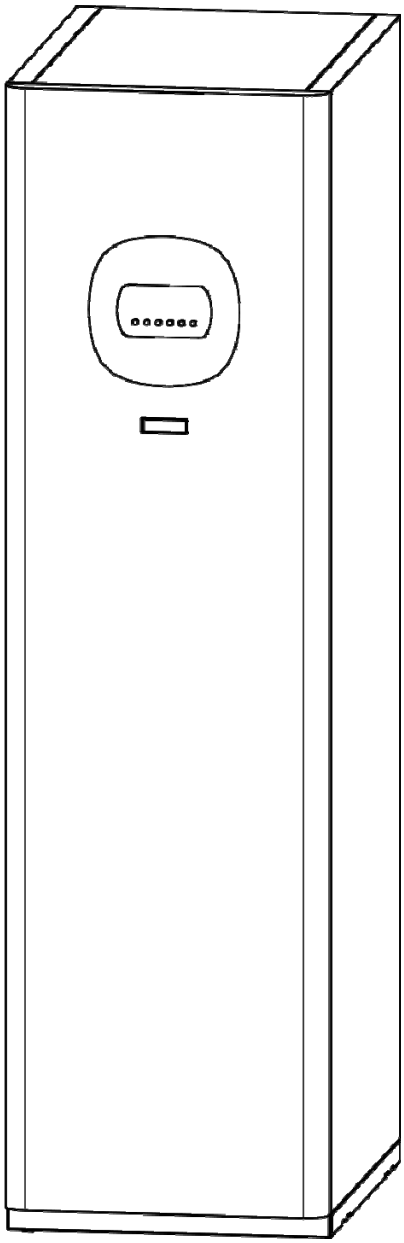

Applus ISO 14001 MA-3661/17 Systems Certification

Applus ISO 9001 EC-8890/17 Systems Certification

DOMUSA TEKNIK

Thank you for choosing a **DOMUSA TEKNIK** heating boiler. You have chosen the **Fusion Hybrid Oil** model from the **DOMUSA TEKNIK** product line. This is a hydraulic module for the “all-in-one” storage of domestic hot water and heating support, which in combination with a **DUAL CLIMA** heat pump is capable of providing the appropriate comfort level for your home, always accompanied by an adequate hydraulic installation and fuelled by diesel. You can also enjoy balanced and economical domestic hot water.

This document constitutes an essential part of the product and must be delivered to the end user. Please carefully read the warnings and advice contained in this manual, as they provide important information regarding the safety of the installation, as well as use and maintenance.

These boilers must be installed by qualified personnel only, in accordance with the legislation in force and following the manufacturer's instructions.

Start-up of these boilers and any maintenance operations must only be carried out by **DOMUSA TEKNIK**’s Authorised Technical Assistance Services.

Incorrect installation of these boilers could result in damage to people, animals or property, and the manufacturer will hold no liability in such cases.

DOMUSA TEKNIK, in compliance with item 1 of the first additional provision of Act 11/1997, hereby informs that the person in charge of delivering the container waste or used container, for its correct environmental management, will be the final holder of the product (Article 18.1 of Royal Decree 782/1998). At the end of its useful life, the product must be taken to a selected collection point for electrical and electronic equipment or must be returned to the distributor at the time of purchasing a new equivalent appliance. For more detailed information on the collection diagrams available, please contact either the collection facilities of the local authority or the distributor where the purchase was made.

CONTENTS **Page**

1 SAFETY WARNINGS

1.1 Safety symbols

All safety messages indicate a potential risk of breakdown or damage. Follow the instructions carefully to prevent accident or damage.

DANGER

This symbol warns of operations or situations involving imminent danger and which could cause severe damage or even death if they are not avoided.

WARNING

This symbol is for warnings to be taken into account for correct use of the appliance and to prevent malfunctioning that could give rise to hazardous situations for the appliance itself and for persons.

CAUTION

This symbol warns of operations or situations involving imminent danger which could cause slight or moderate damage if they are not avoided.

1.2 Other symbols

The following symbols are used in the instructions to draw your attention to important information.

Important **This indicates a risk of breakdown and damage to persons and/or property.**

Note **This indicates important additional information related to the correct operation of the module.**

1.3 Safety warnings

DANGER

When working on the system

Be sure to disconnect both the module and the heat pump from the power supply. To do this, the main network supply can be disconnected by checking that both the support module and the heat pump are completely disconnected.

1.4 General installation guidelines

DOMUSA TENIK ensures that this product contains no harmful substances and that no harmful materials have been used in its manufacture.

Please carefully read this instruction manual and keep it in a safe, easily accessible place. **DOMUSA TEKNIK** shall not be held liable for any damage that may occur due to failure to follow these instructions.

The **Fusion Hybrid Oil** module can only be installed in combination with a heat pump from the **DUAL CLIMA** line from **DOMUSA TEKNIK**. The **FUSION** module, in combination with a **DUAL CLIMA** heat pump, is suitable for use in both heating and cooling installations, and can be combined with fan coils, underfloor heating/cooling and low-temperature radiators. It should be connected to a heating/cooling system and to a hot water distribution network that is compatible with its performance and power.

This appliance should only be used for the purpose for which it has been expressly designed. Any other use is considered unsuitable and therefore hazardous. The manufacturer shall not be considered liable under any circumstances for damage caused by unsuitable, erroneous or improper use.

Improper installation or placement of equipment or accessories may cause electrocution, short circuit, leakage, fire, or other damage to the equipment. Use only accessories or optional equipment manufactured by **DOMUSA TEKNIK** and specifically designed to work with the products presented in this manual. Do not modify, replace or disconnect any safety or control device without first consulting the manufacturer or the Official Technical Assistance Service of **DOMUSA TEKNIK**.

Current legislation must be taken into account on installing this appliance, and it must be installed in a place with suitable ventilation.

The module must be installed by an installer authorized by the Ministry of Industry and it must be started up by an Official Technical Assistance Service authorized by **DOMUSA TEKNIK**..

The module must be installed considering the requirements demanded at each installation site:

- The Technical Building Code.
- The Regulation for Heating Installations in Buildings.
- The Low Voltage Regulation.
- The Codes of good practice and regulations refer to the latest versions of the same.

2 LIST OF COMPONENTS

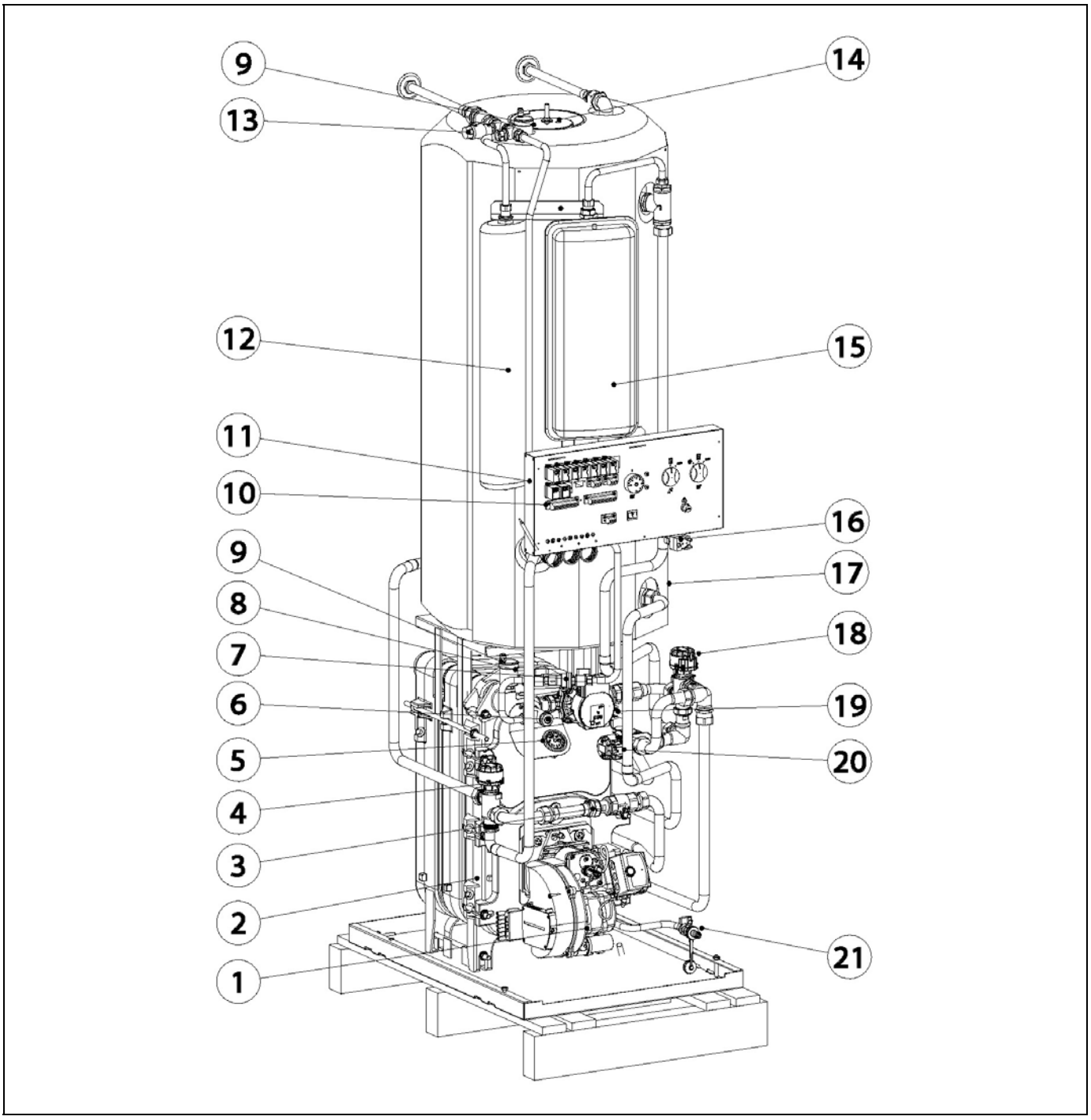

1. Burner.
2. Boiler body.
3. Support pump shim.
4. 3-way diverter valve (G1).
5. Thermomanometer.
6. Bulb-holder sheath.
7. Filling disconnector.
8. Heating safety valve.
9. Automatic air bleed valve.
10. Electrical connection strips.
11. Control panel.
12. DHW expansion vessel.
13. DHW safety valve.
14. DHW tank bulb holder.
15. Heating expansion vessel.
16. Water pressure switch.
17. Tank deposit.
18. 3-way diverter valve (E1).
19. Circulation pump.
20. 3-way diverter valve (G1).
21. Primary drain valve.

3 CONTROL COMPONENTS

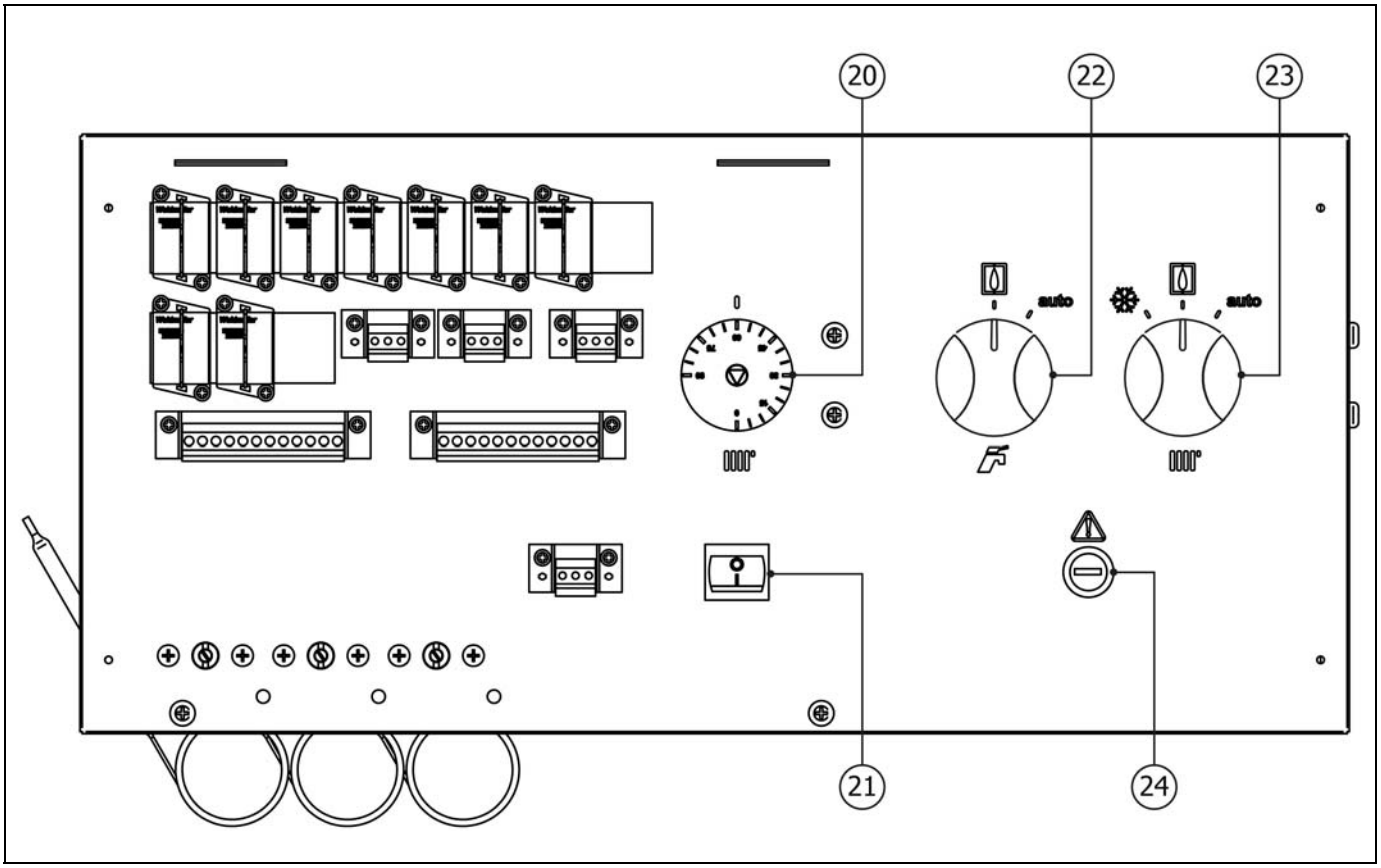

20. Heating control thermostat in boiler mode (IIIII')

With it, it is possible the heating working temperature the in boiler by stopping the burner when the boiler temperature is equal to that selected or keeping it on while it is lower.

21. Burner and pump switch (IIIII')

It allows the burner and the recirculation pump of the module to be switched on and off to maintain these two components. For any other operation in the rest of the components, it is essential to disconnect both the module and the heat pump from the power supply.

22. DHW operating mode selector (F)

With it, it is possible to select the Domestic Hot Water operating mode.

23. Heating operation mode selector (IIIII')

With it, it is possible to select the heating operation mode.

24. Safety thermostat (⚠)

It ensures that the boiler temperature does not exceed 110ºC, stopping its operation.

4 INSTALLATION INSTRUCTIONS

The **Fusion Hybrid Oil** module can only be installed in combination with a heat pump from the **DUAL CLIMA** line, supplied by **DOMUSA TEKNIK**. Therefore, for its operation, these devices should be connected to each other, both hydraulically and electrically. In this section, the necessary operations for said connection are described in detail.

The module must be installed by personnel authorised by the Ministry of Industry, in compliance with the applicable laws and regulations. In general, these laws and regulations a are the "Basic Gas Installation Standards", the "Heating, Air Conditioning and Domestic Water Installation Regulation" and all other local regulations.

This support module is suitable for heating water to a temperature below boiling point at atmospheric pressure. It must be connected to a heating installation and/or a domestic hot water distribution network, which must always be compatible with its performance and power.

This appliance should only be used for the purpose for which it has been expressly designed. Any other use is considered unsuitable and therefore hazardous. The manufacturer shall not be considered liable under any circumstances for damage caused by unsuitable, erroneous or unreasonable use.

Remove all the packaging and check that the contents are complete. In case of doubt, do not use the module and refer to the supplier. Keep the packaging elements out of reach of children, as they can be dangerous.

When it is decided not to use the module anymore, the parts likely to constitute potential sources of danger should be properly decommissioned.

4.1 Location

The module should be located at a sufficiently ventilated site. The module must be located so that the air grilles on the premises are not obstructed and that normal maintenance is possible even if it is placed between items of furniture.

4.2 Combustion product removal

It is essential that this type of boiler be connected to a flue, it being understood as a smoke duct that that is capable of creating a depression (in this case, 1.5 mmH2O): For the flue to create a pressure drop, the following recommendations should be taken into account:

- It should be suitably insulated.
- It should be independently located, with a separate flue for each boiler.
- It should be vertical, avoiding any angles greater than 45º.
- It should protrude one meter from the roof ridge or an adjacent building.
- It should always have the same diameter. It is recommended that it be circular, and never narrower than the boiler outlet.

Nevertheless, it should always be built in accordance with current installation regulations.

4.3 Hydraulic installation of the heating and DHW circuit.

The hydraulic installation should be carried out by qualified personnel, in compliance with the current installation regulation (RITE) and considering the following recommendations:

- It is recommended to use a correctly sized piping based on the installation in order to reach the minimum water flow rate of the hydraulic circuit. The inside of the installation piping should be thoroughly cleaned before switching on the module.
- We recommend inserting cut-off valves between the installation piping and the apparatus to simplify maintenance tasks.
- If the module is installed at a lower height than the heating installation, it is advisable to create a siphon at the boiler outlet, to prevent the installation from heating up due to natural convection when heating is not required.

- When the DHW supply pressure is over 0.7 MPa (7 bar), a pressure reducer must be fitted.
- It is advisable to install a thermostatic mixing valve at the DHW outlet to protect against burns and to guarantee a constant, stable supply of hot water.
- All water circuit piping **MUST** be insulated to prevent condensation during operation in cooling mode and reduction of cooling and heating capacity, as well as to prevent freezing of outside pipes during winter. The minimum insulation thickness of the pipes should be 19 mm (0.039 W/mK), preferably comprising a closed cell insulation or a vapor barrier. In outdoor areas exposed to the sun, the insulation must be protected from the effects of degradation.
- Drain valves and suitable devices should be fitted for the correct removal of air from the circuit during the filling stage.
- A water filter **must be installed** in the water circuit of the heat pump, in order to avoid obstructions or narrowing caused by dirt in the installation. The filter **MUST** be installed before filling the installation with water and in the return branch of the machine, in order to avoid the entry of dirty water into the heat exchanger (condenser). It is advisable to insert this filter between two cutting keys, in order to avoid emptying the installation during cleaning. The type of filter installed must be adapted to the particular characteristics of each installation (type and material of the water pipes, type of water used, water volume of the installation, etc.). The water filter should be checked and cleaned, if necessary, at least once a year. In new installations, however, it is advisable to check it within the first few months of its commissioning.
- The **Fusion Hybrid Oil** hydraulic module is an accessory that should be installed in combination with a **DUAL CLIMA** heat pump for its correct operation. Therefore, in addition to the recommendations described above, it must comply with those indicated in the heat pump installation manual.

4.4 Hydraulic installation of a support pump (C4)

The **Fusion Hybrid Oil** hydraulic module allows the installation of a circulation pump to increase the water flow rate of the machine where necessary, in addition to that obtained by its internal pump. This circulation pump will operate in parallel with the internal pump of the **C4** machine. To install this support pump, please carefully follow the instructions belows:

-First, remove the support pump shim (3) and its insulator.

The insulator should be kept for later use.

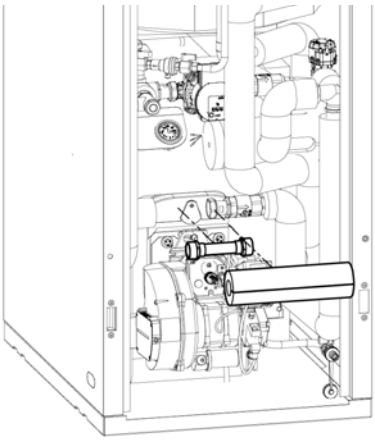

- In the place of the support pump shim (3), the support pump must be installed in the direction indicated in the figure. Also, the previously retired insulator piece should be used to obtain a new piece of 120mm.

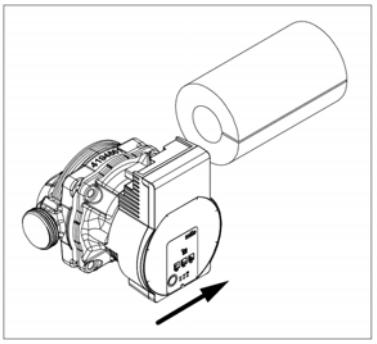

- The support pump should be installed as shown in the image.

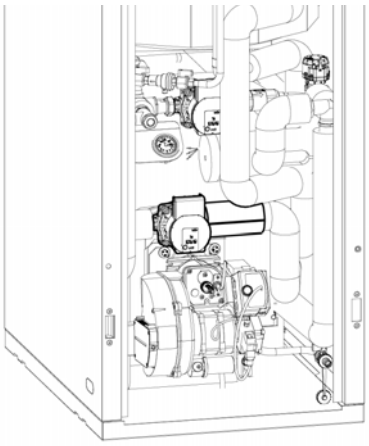

Important **If the Fusion Hybrid Oil module is used in the cooling mode in addition to heating, it is essential to insulate the pump correctly, in order to avoid condensation during cooling mode operation.**

4.5 Electrical connections

The module is equipped for connection at 230 V, 50 Hz, to terminals 1 and 2 of terminal strip **J1** (see *"Electrical Connection Diagram"*). **Make sure that the appliance is grounded.**

In addition, for the correct operation of the **Fusion Hybrid Oil** module, it is also necessary to connect the heat pump to the power supply as indicated in the section "*Connection to the general power supply*" of the **DUAL CLIMA** heat pump manual.

DANGER:When handling the electrical installation, make sure that both the module and the Dual Clima heat pump are disconnected from the mains.

The **Fusion Hybrid Oil** module features a series of motorised diverting valves and DHW and Heating support activation signals that are sensed by the **DUAL CLIMA** heat pump. To do this, electrical cables with a minimum section of 0.5 mm^2 must be passed from the terminal strip of the **DUAL CLIMA** heat pump to the inside of the **Fusion Hybrid Oil** module. The module has a series of cable glands at the rear, through which it is possible to insert these cables into the equipment.

The electrical connection of these signals will be carried out between the general terminal strip of the heat pump and the terminal strip of the module, by opening the door and removing the front cover of the internal control panel (11) to access it. The following figure describes how to connect all the signals necessary for correct operation.

First, it is necessary to remove the jumpers in the room thermostat connection of the **DUAL CLIMATE** heat pump.

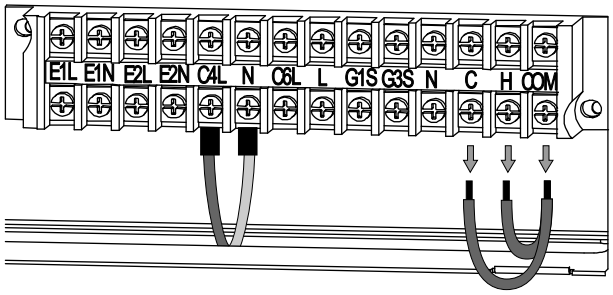

Once the jumpers have been removed, all the connections specified in the following diagram must be made.

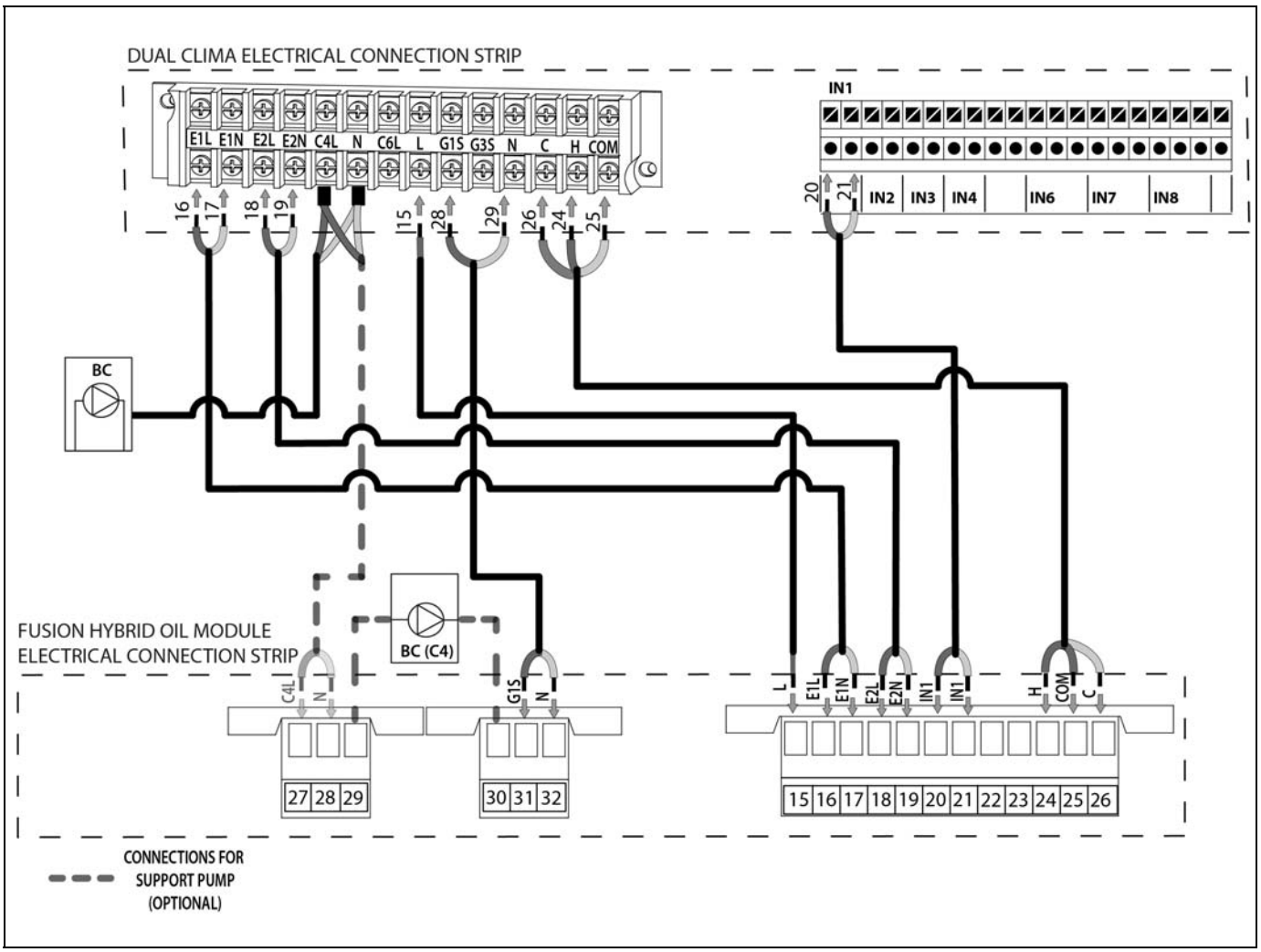

DANGER: When handling the electrical installation, make sure that both the module and the Dual Clima heat pump are disconnected from the mains.

For the electrical connection of the support circulation pump C4 (optional), first two wires must be connected in parallel with the heat pump circulation pump between terminals **C4L** and **N** of the **DUAL CLIMA** heat pump. These cables will be connected to the same terminals (see figure). Then, these cables must be connected from the terminal strip of the **DUAL CLIMA** heat pump to the inside of the **Fusion Hybrid Oil** module on terminals 27 and 28. Finally, the support circulation pump C4 will be connected to terminals 29 and 30 of the module terminal block (see "Electrical diagram")

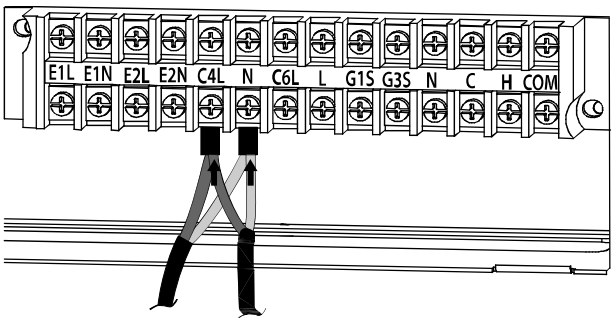

4.6 Assembly of the DHW probe

For the correct operation of the **Fusion Hybrid Oil** hydraulic module, the DHW probe, supplied in the **DUAL CLIMA** heat pump, must be inserted in the bulb sheath provided in the module tank. This probe is located inside the machine and is identified as **"DHW TANK SENSOR"**. This probe is connected by default in the heat pump entries strip (terminal IN1). The probe provided with the heat pump is 5 meters long. If necessary, could be extended to a maximum length of 50 meters (section between 0,5 ÷ 1,25 mm^2). For correct assembly, the probe must be inserted into the bulb sheath provided, following the steps indicated below:

1.- With the module door open, remove the top cover by pressing its central part upwards.

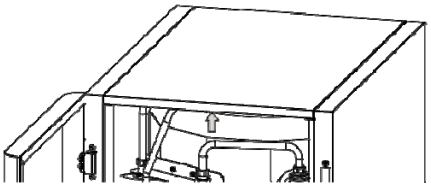

2.- Insert the sensor into the bulb sheath (14) provided in the tank. Be sure to insert the sensor bulb until it stops against the bottom of the bulb sheath.

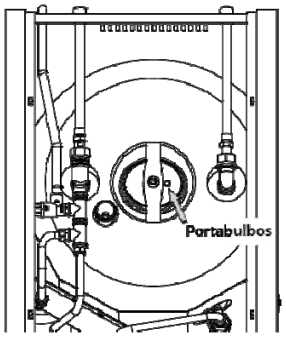

3.- Reassemble the top cover, placing it in position and pressing the four clamping pins.

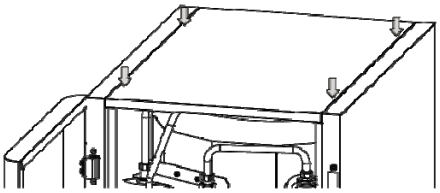

4.- Connect the probe to the electrical connection strip (10) on terminals 22 and 23. (see *"Electrical Diagram"*").

DANGER: When handling the electrical installation, make sure that both the module and the Dual Clima heat pump are disconnected from the mains.

4.7 Assembly and connection of the control panel

The control panel is supplied inside the heat pump and must be mounted on the front of the **Fusion Hybrid Oil** hydraulic module. To do this, open the module door and access the control panel holder located in the rear part. For its correct assembly, please carefully follow the following steps:

1.- Open the door of the **Fusion Hybrid Oil** module and loosen the butterfly nuts located on the back of the door as indicated in the figure.

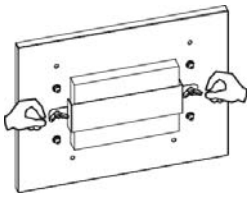

2.- Remove the support cap from the control panel, moving it upwards.

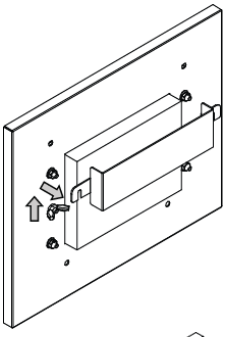

3.- Remove the protective foam insert.

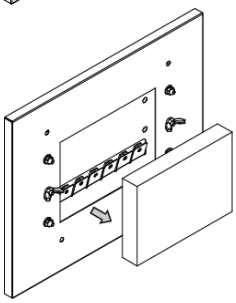

4.- Place the control panel removed from the **DUAL CLIMA** heat pump in its place.

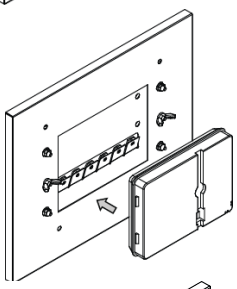

5.- Reassemble the control panel cover, inserting it into the wing nuts, moving it downwards.

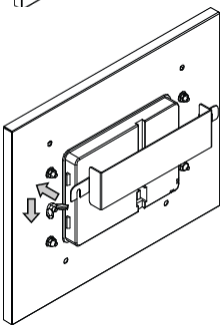

6.- Tighten the wing nuts to attach the handle to the drawer unit.

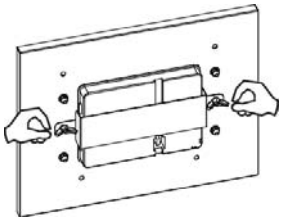

Before switching on the heat pump, the control panel must be connected to the external machine. To do this, pass the cable that is supplied inside the heat pump (located alongside the probe harness) to the interior of the **Fusion Hybrid Oil** module. The hydraulic module has a series of cable glands at the rear, through which it is possible to insert such cables into the module.

Finally, the connectors of the cable and the control panel should be connected at their ends. **A cable with sufficient length should be provided inside the module**, in such a manner that it is possible to open the front of the equipment without having to disconnect said cable and facilitate any maintenance operation inside.

The cable supplied with the heat pump is 5 metres long. Where necessary, it can be extended up to a maximum distance of 100 metres (section between 0.5÷1.25 mm^2).

DANGER: **When handling the electrical installation, make sure that both the module and the Dual Clima heat pump are disconnected from the mains.**

Note **Provide a sufficient length of cable inside the module in order to facilitate the opening of the front.**

4.8 Configuring the Heat Pump

To properly configure and manage the operation of the **DUAL CLIMA** heat pump, please carefully read the "Installation and Operating Instructions Manual" supplied alongside the **DUAL CLIMA** heat pump.

Nevertheless, in order to obtain all the features for which the supporting module has been provided, it should be ensured at least that the DHW service and the Heating and/or Cooling service are activated by adjusting the DIP-Switch (**SW1**) of the control panel of the heat pump.

In addition, for the correct management of the **DUAL CLIMA** heat pump with the support module, it will be essential to set the value 3 through parameter P27 of the Technical menu of the **DUAL CLIMA** heat pump and value 0 through parameter P26 of the Technical menu of the **DUAL CLIMA**.

5 STARTING UP THE BOILER

5.1 Prior warnings

Repair and maintenance of the module must be carried out by a qualified professional, authorised by **DOMUSA TEKNIK**. For optimum functioning and conservation of the module, it should be serviced annually.

Please carefully read this instruction manual and keep it in a safe, easily-accessible place.

Before any intervention, disconnect the heat pump and the supporting module from the mains.

DOMUSA TEKNIK will not be liable for any damages caused by failure to follow these instructions.

5.2 Filling the domestic hot water tank

The hot water tank must be filled before filling the heating circuit. Open the flow of domestic hot water to the hot water tank and turn on a hot water tap in the installation. When the tap begins to run freely, turn it off, as this means the hot water tank is full.

5.3 Filling the heating circuit

The **Fusion Hybrid Oil** module is equipped with a filling disconnector *(7)*. The heat pump (external unit) includes a manual drain valve on the upper part of the heat exchanger flow tube (condenser). Open it during the filling process and wait for the water to start running (please refer to the operations manual of the **DUAL CLIMA** heat pump). The air should also be bled from the rest of the installation using the air bleed valves provided. The filling must be carried out slowly, thereby facilitating air evacuation from the water circuit. Once the installation is full, close the disconnector valves.

Note The module **Fusion Hybrid Oil** is equipped with a security water pressure switch set at a pressure of 0,5 bar, which does not allow the module to start until that pressure is reached in the installation.

Important **Turning on the module or the heat pump without water may cause serious damage to the equipment.**

5.4 Electrical connection

The electrical connections of the module must be made by sufficiently qualified staff in strict compliance with the sections below and with any electrical safety regulations applicable at the time of installation.

DANGER

Any intervention inside the module or the heat pump, and in particular on the electrical connection strips, must be carried out by making sure that the power supply is disconnected from both the module and the Dual Clima heat pump.

If the electrical supply is connected, electrical contact could occur, causing serious damage and/or death due to electrocution.

The module is designed for mains connection at 230 V – 50 Hz using the standard cable supplied.

Make sure that the electrical installation corresponds to the maximum power to be supplied, as indicated on the boiler's specifications label. To replace the main fuse on the electronic card, use 2A fuses.

Important **It is essential to connect the module to ground.**

Note **Make sure you have tightened the cables sufficiently. The electrical connections must be made in compliance with the applicable standards and regulations in the place of installation.**

5.5 Connecting the room thermostat ("AUTO" mode)

The **Fusion Hybrid Oil** module is prepared for the connection of up to 2 room programmable thermostats or room thermostats (see *"Connection Diagram"*), which will activate or stop the heating and/or cooling service of the heating/air-conditioning installation, turning off the heat pump and the supporting module when the desired temperature is reached in the home and turning it on when it comes down again.

Connecting terminals **33** and **35**, will activate and deactivate the Cooling mode, and connecting terminals **33** and **34** of the terminal strip (see *"Electrical Diagram"*) will activate and deactivate the Heating mode, so that the operating modes of the heating/air-conditioning system will be remotely and automatically managed (**"AUTO"** mode), from the place where the installed room thermostats are located.

Terminals **33, 34 and 35** are supplied from the factory with a jumper wire connected to each of them, so, irrespective of the configuration of thermostats to be installed, it will be necessary to remove **both** jumper wires before connecting the room thermostats.

Depending on the types of thermostats used or their combination, up to 3 types of room thermostat configurations can be installed. The following sections describe in detail the operation and installation of each of these configurations.

> ⚠ DANGER: **When handling the electrical installation, make sure that both the module and the Dual Clima heat pump are disconnected from the mains.**

Connecting a switched thermostat for Heating/Cooling with 3 wires ("AUTO" mode)

In addition to selecting the desired temperature and periods of operation, this type of thermostat, if it is of the programmable thermostat type, offers users the possibility of selecting the mode of operation (Heating ☀/Cooling ❄) in the thermostat itself.

For its operation, this type of thermostat has 3 communication wires: one for the activation signal of the Heating mode, one for the activation signal of the Cooling mode, and one for the common signal. Depending on the status of each of the signals, the **Dual Clima** heat pump will manage the Heating/Cooling operating modes as follows:

Heating mode	Cooling mode	OFF (Stand-By) (temp. reached)
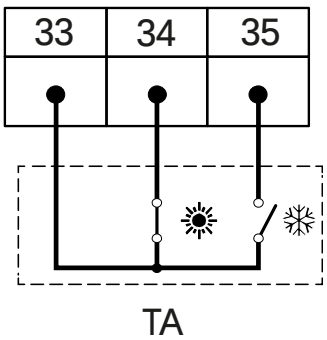	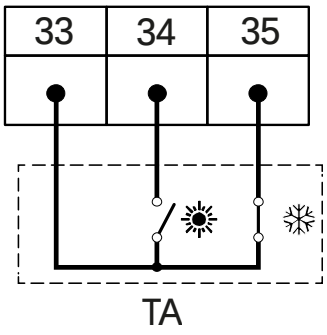	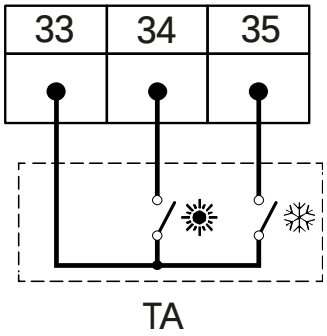

Fusion Hybrid Oil

Terminals **33, 34 and 35** are supplied from the factory with a jumper wire connected to each of them, so in order to install this type of thermostat, it will be necessary to remove **both** jumper wires and connect the thermostat as described in the following figure:

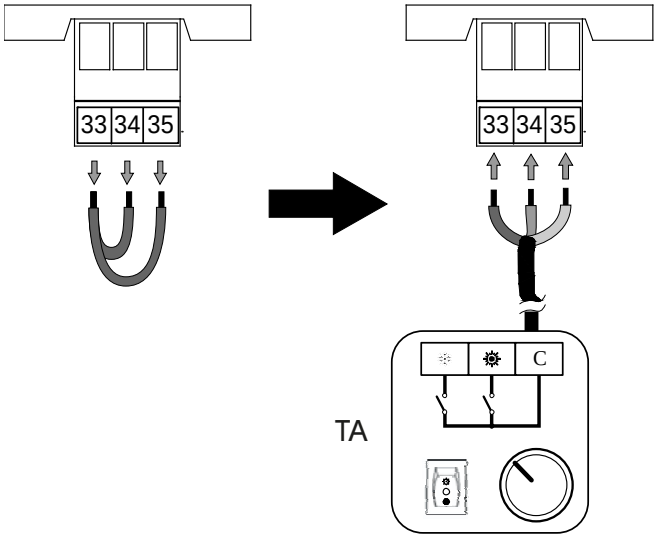

DANGER: When handling the electrical installation, make sure that both the module and the Dual Clima heat pump are disconnected from the mains.

Connecting the two room thermostats

In this type of configuration, two single room thermostats will be connected, one in terminals **33 and 35** (**TAF** Cooling thermostat) and one in terminals **33 and 34** (**TAC** Heating thermostat). Each of them manages a different operating mode, so each thermostat must be of a type compatible with the operation for which it has been installed. The thermostat connected to the cooling input (**TAF**) should demand (closed circuit signal) when the room temperature is higher than the desired temperature (setpoint temperature), and in turn, the thermostat connected to the heating input (**TAC**) should demand (closed circuit signal) when the room temperature is lower than the desired temperature (setpoint temperature).

The **Dual Clima** heat pump activates the Heating/Cooling operating modes according to the status of the signal received from each thermostat, as follows:

Heating mode	Cooling mode Cooling	OFF (Stand-By) (temp. reached)	Manual mode
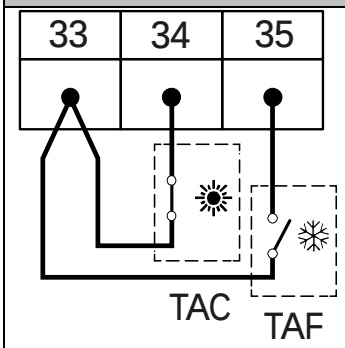	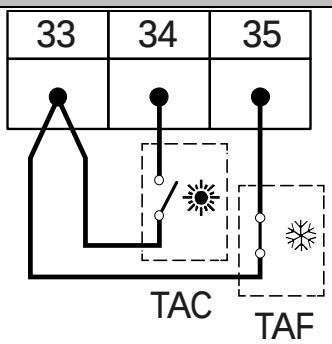	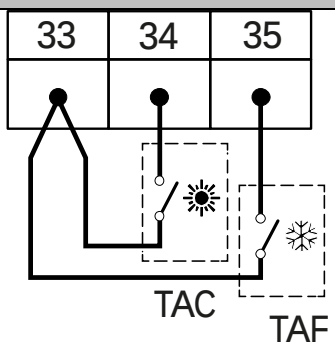	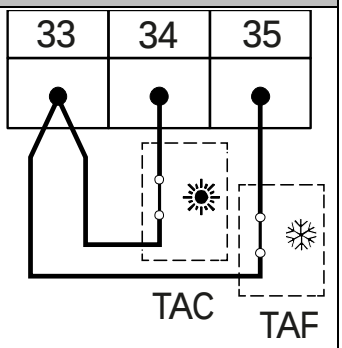

As indicated in the figure, if the setpoint temperatures of the room thermostats are selected in such a way that both require simultaneous operation, the electronic control of the heat pump will start to operate in “Manual” mode, that is, the Heating/ Cooling Operating modes must be selected manually from the control panel. To avoid this situation, it is essential to **make sure to correctly**

select the temperatures of each of them, in such a way that they do not cross and to avoid that both thermostats are activated at the same time.

Terminals **33, 34 and 35** are supplied from the factory with a jumper wire connected to each of them, so in order to install the thermostats, it will be necessary to remove **both** jumper wires and connect the thermostats as described in the following figure:

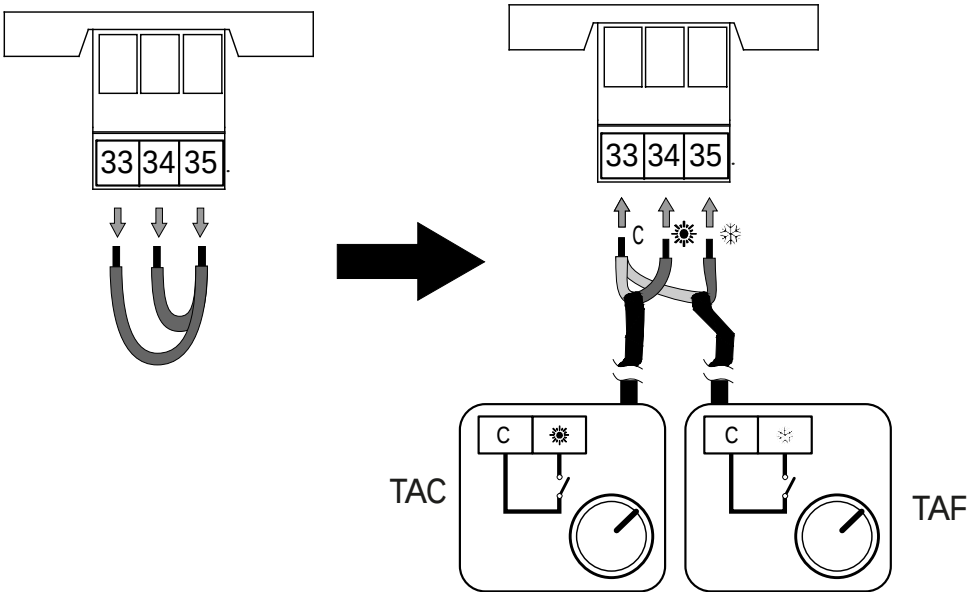

DANGER: When handling the electrical installation, make sure that both the module and the Dual Clima heat pump are disconnected from the mains.

Connecting the room thermostat

In this type of configuration, a single room thermostat will be connected in inputs **33 and 35** (**TAF** Cooling thermostat) or in inputs **34 and 35** (**TAC** Heating thermostat). For this room thermostat management configuration to work correctly, the heat pump should be configured for **a single** operating mode, that is, Heating or Cooling (see *"Heat pump configuration"*) in the manual of the Dual Clima heat pump. Depending on the input to which the thermostat is connected, it will manage the corresponding mode of operation, and the type of room thermostat must be prepared for this purpose. The thermostat connected to the cooling input (**TAF**) should demand (closed circuit signal) when the room temperature is higher than the desired temperature (setpoint temperature), and in turn, the thermostat connected to the heating input (**TAC**) should demand (closed circuit signal) when the room temperature is lower than the desired temperature (setpoint temperature).

Terminals **33, 34 and 35** are supplied from the factory with a jumper wire connected to each of them, so in order to install this type of thermostat, it will be necessary to remove **both** jumper wires and connect the thermostat as described in the following figure, depending on the mode to be managed:

DANGER: When handling the electrical installation, make sure that both the module and the Dual Clima heat pump are disconnected from the mains.

Heating thermostat (Heating Mode)

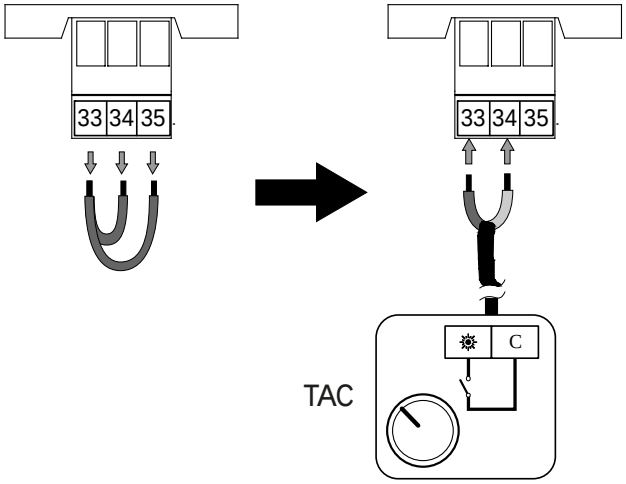

Cooling thermostat (Cooling Mode)

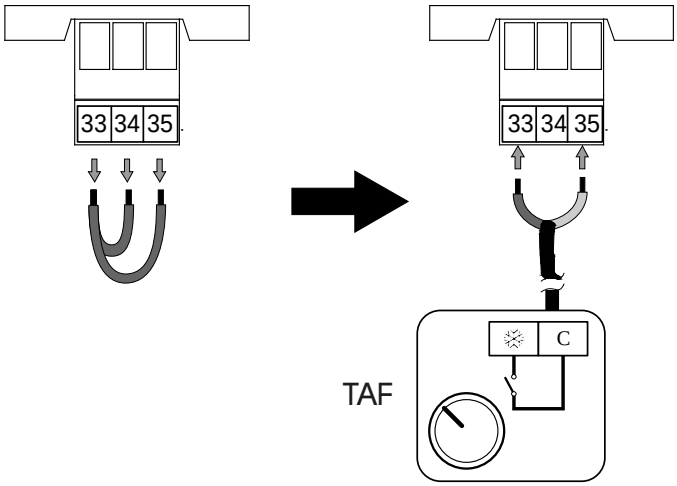

5.6 Start-up

In order for the **warranty to be valid**, the module must be started up by an official **DOMUSA TEKNIK Technical Assistance Service**. Before beginning the start-up process, the following must be complied with:

- The module and the **DUAL CLIMA** heat pump should be electrically connected to the network.
- The installation should be filled with water (the pressure should be between 0.1 to 0.15 MPa (1 to 1.5 bar).
- The fuel should reach the burner at a pressure of no more than 0,05 MPa (0.5 bar).
- Check that the flue is correctly installed.
- If the installation has flow and return valves, check that they are open.
- If there is a room thermostat, adjust it to the desired temperature.
- It is essential to carry out a combustion analysis of the module, using a suitable analyser for this purpose. If the combustion analysis is not correct, the burner must be adjusted until it is corrected.

To start the module, follow the instructions in the *"Operation"* section.

5.7 Installation hand-over

After the initial start-up, the Technical Assistance Service will explain to the user how the module functions, making any observations they consider relevant.

The installer is responsible for clearly explaining to the user the functioning of any control or regulation device forming part of the installation but not supplied with the boiler.

6 OPERATION

The **Fusion Hybrid Oil** module is an oil supporting module of the **DUAL CLIMA** heat pump. Therefore, its operation will be fully managed by the **DUAL CLIMA** heat pump controllers connected to it, which should be mounted on the front of the module (see *"Assembly and connection of the control panel").*

It must be ensured that parameter **P27** of the Technical menu of the **DUAL CLIMA** heat pump is at value 3 and that parameter **P26** of the Technical menu of the **DUAL CLIMA** heat pump is at value 0. This ensures the correct management of the **DUAL CLIMA** heat pump with the supporting module.

6.1 Switching on the module

Selection of the module temperature setpoint.

The boiler setpoint temperature range selectable by the heating thermostat *(20)* is 60-80°C. The **Fusion Hybrid Oil** module is a support module, so, in order to obtain maximum performance and subsequent energy savings in operation, it is advisable to select a setpoint temperature of 60-70°C, provided that the system of installed heating and the insulation conditions of the home allow it.

6.2 Operation in "auto" mode

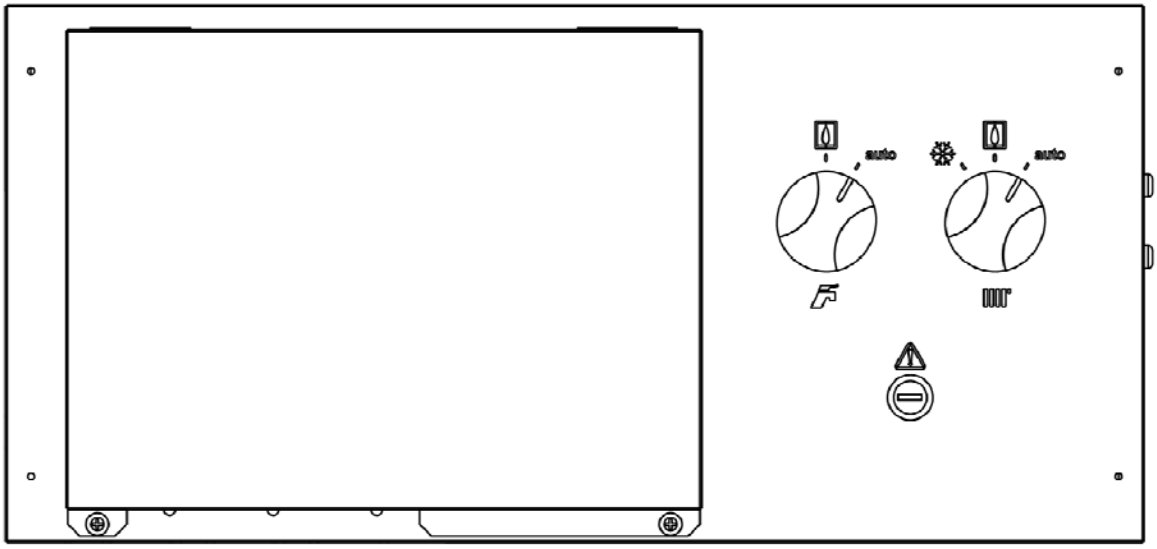

This will be the default operating mode of the **Fusion Hybrid Oil module** (with the ACS selector (23) and the heating selector (22) in auto position. In this mode, the operation will be managed by the **DUAL CLIMA** heat pump, as indicated in the instruction manual of the heat pump according to configuration **P27 = 3**. See *"Configuration of auxiliary or supporting energy sources"*.

6.3 Operation with the DHW selector *(23)*

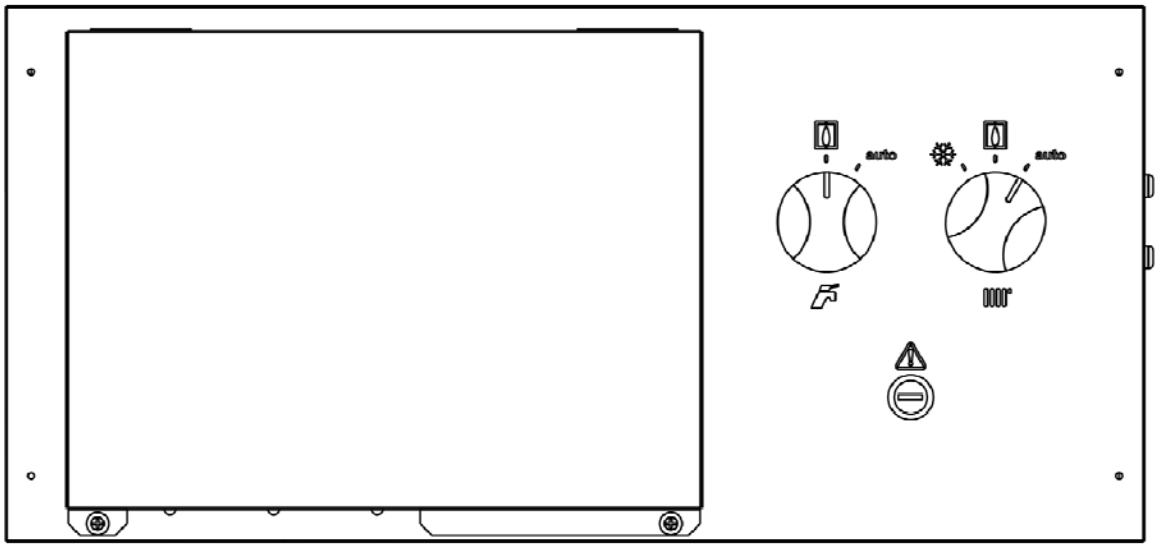

By turning the DHW selector *(23)* to position the supporting module becomes the main energy source for the DHW demand. The heat pump stops managing the production of DHW, leaving the heating and production of DHW to the module. The DHW temperature for this operating mode will become the maximum selectable in the heat pump.

In this operating mode, the display of the temperature of the DHW tank becomes "69" in a fixed way, this being not its real temperature, as the complete management of the temperature of the DHW tank is performed by the supporting module.

6.4 Operation with the Heating selector *(22)*

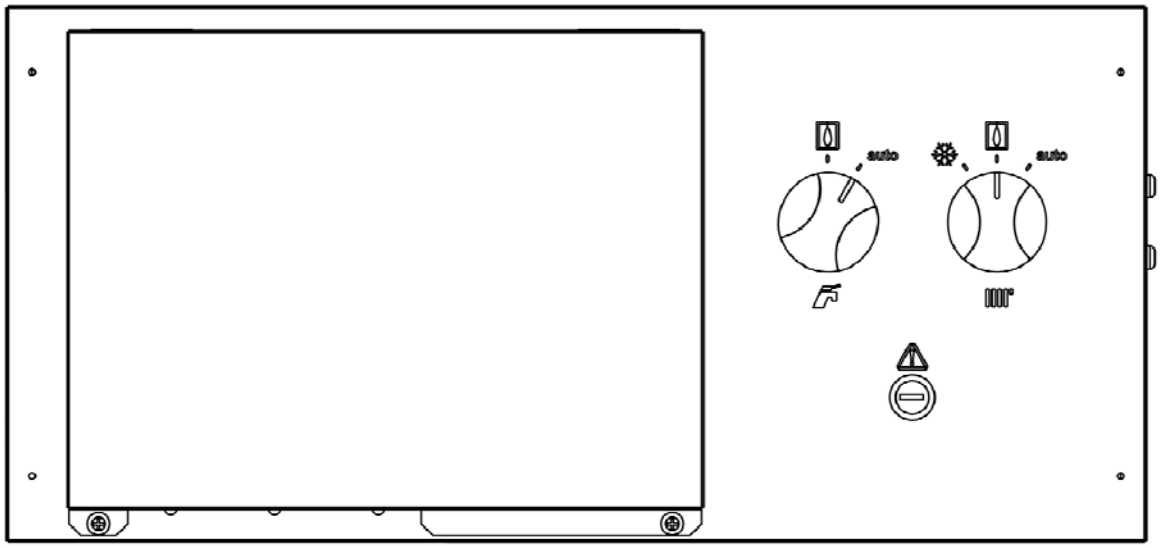

For greater comfort in heating, by means of the heating selector *(22)*, it is possible to change the operating mode and energy source that will work on the heating demand.

By turning the heating selector *(22)* to position the supporting module becomes the main energy source for heating. The heat pump stops managing the heating demand, leaving the complete management to the module.

The heating temperature for this operating mode will be the one selected in the thermostat *(22)* of the supporting module, see *"Selecting the module temperature setpoint"*.".

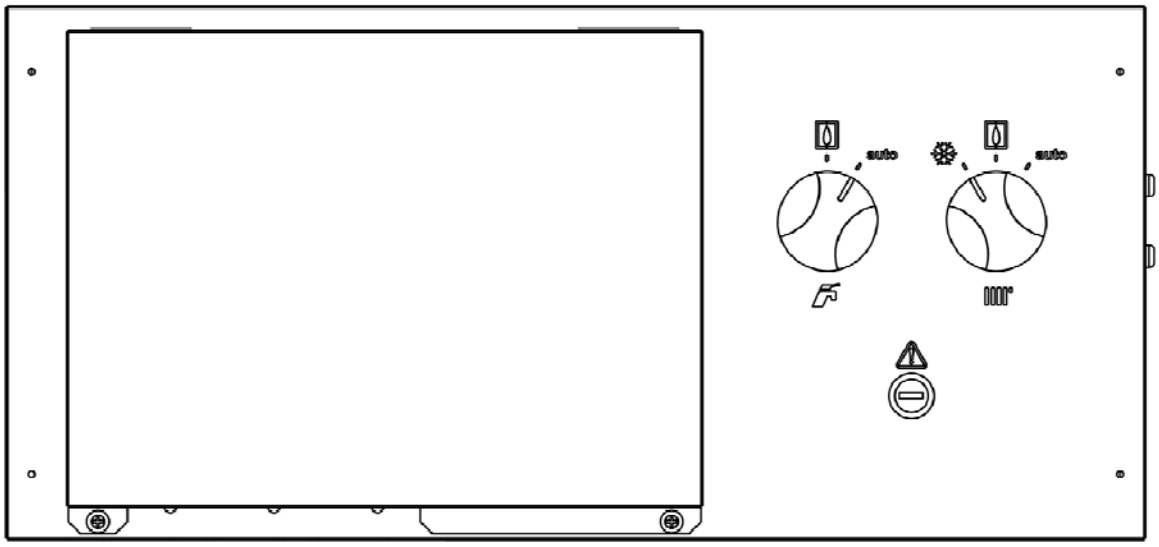

For a better comfort in the air conditioning, by means of the heating selector *(22)*, it is possible to change the operating mode in air conditioning demand.

By turning the heating selector *(22)* to position ❄ the heat pump begins working exclusively in air conditioning mode. The heat pump stops managing the heating demand by focusing its operation exclusively on-air conditioning. The DHW demand will be managed according to the DHW selector *(23)*.

By combining the operating modes in the heating selector *(28)* in position ❄ and the DHW selector *(27)* in position , an uninterrupted air conditioning operation is achieved with the heat pump, while the support module manages the DHW demand.

6.5 Operation with room thermostat

The **Fusion Hybrid Oil** module features a connection prepared for the installation of a room thermostat or programmable thermostat (see *"Connecting the room thermostat" in this manual).* This will allow the management of the pack operation depending on the temperature inside the home. Optionally, **DOMUSA TEKNIK** offers a wide range of such devices in its product catalogue.

The installation of a room thermostat will optimise the installation's performance, adapting the heating and air conditioning to the requirements of your home and obtaining enhanced comfort. Additionally, if the thermostat allows the operating hours to be programmed (chronothermostat), it can adapt the system to the hours of use of the installation.

7 HEATING CIRCUIT ADJUSTMENT

7.1 Adjustment of the maximum boiler setpoint temperature

The maximum heating setpoint temperature (default 70°C) can be adjusted through the boiler control thermostat *(20)*, in order to adjust it to the characteristics of each installation, optimising the energy efficiency of the system.

8 DRAINAGE

The draining of the water from the primary installation is carried out by opening the drain valve *(19)*, located inside the module, in the bottom right. Connect a flexible tube to this valve and run it to a drain. It is advisable to open the drain valves present in the Heating/Air conditioning installation so that air enters the circuit. Once the emptying operation has been carried out, close the valve and disconnect the flexible tube.

Important **During the emptying process, it is advisable to turn off both the module and the heat pump and disconnect them from the power supply.**

9 SAFETY INTERLOCKS

The diesel boiler included in the module has two types of safety interlocks:

9.1 Temperature safety interlock

This locking occurs when the boiler exceeds a temperature of 110°C. To unlock it, press the button on the safety thermostat *(24)* after first removing the button cover.

9.2 Burner interlock

This cut-out is indicated by the light for the locking of the burner *(1)*. This occurs as a result of an anomaly in the burner or in the fuel installation. To lock it, press the illuminated button that lights up on the burner.

Important **If any of these cut-outs occur repeatedly, call your nearest official Technical Assistance Service.**

10 MODULE MAINTENANCE

To keep the module in perfect working condition, a review must be carried out annually by personnel authorised by **DOMUSA TEKNIK.**

Module and flue maintenance

The most important aspects to be checked are as follows:

- The water pressure in the heating/air conditioning installation, **when the water is cold**, must be between 0.1 and 0.15 MPa (1 and 1.5 bar). If it is not between these values, it must be filled until they are reached.
- The control and safety devices (thermostats, gas valve, etc.) must operate correctly.
- The burner and the inside of the boiler chamber must be clean. Soft brushes or compressed air are recommended for cleaning the boiler, to prevent damage. **Do not use chemical products.**
- The expansion vessel must be full, in accordance with the specifications on the vessel plate.
- Check the tightness of the water installations.
- The flues must be free of any obstacles and have no leaks.
- The circulation pumps and diverter valves must not be blocked.

10.1 Cleaning the boiler

To keep the boiler in perfect working order, we recommend cleaning the boiler chamber, exhaustion ducts and condenser on a yearly basis. A cleaning brush of a suitable size for cleaning the inside of the exhaustion ducts is supplied with the boiler for this purpose. This brush is located at the rear of the boiler, beside the condenser.

The combustion chamber and exhaustion ducts should not be cleaned using chemical products or hard steel brushes. After any cleaning operation has been carried out, it is important to run several ignition cycles to check all the elements are functioning correctly.

10.2 Anti-frost protection

In areas subject to very low temperatures, it is advisable to take precautions in order to avoid damage to the boiler by frost. It is advisable to add anti-freeze to the water in the heating circuit. If the boiler is to be out of use for long periods of time, we recommend **draining all the water from the boiler.**

10.3 Characteristics of the water

In areas with water hardness of over 25-30ºF, treated water must be used in the heating/air conditioning installation to avoid any scale deposits on the module.

It should be noted that even a few millimetres of scale will greatly reduce the heat conductivity of the module, causing a major drop in performance.

Treated water must be used in the heating/air conditioning circuit in the following cases:

- Very large circuits (containing a large amount of water).
- Frequent filling of the installation.

If repeated partial or total draining of the installation is necessary, we recommend filling it with treated water.

11 COMBUSTION ADJUSTMENT

The boiler combustion adjustment must be carried out by the Official Technical Assistance Services of **DOMUSA TEKNIK**. Any operation performed on the parameters related to combustion, without considering this section of the manual, may cause damage to people, the boiler, and the installation. **DOMUSA TEKNIK** will hold no liability for any damage caused by unsuitable handling of the power regulation elements of the boiler carried out by personnel not authorised by the company.

12 CHARACTERISTICS OF THE CIRCULATING PUMP

The characteristics and features of the circulating pump are described below.

12.1 Characteristics of the SC pump

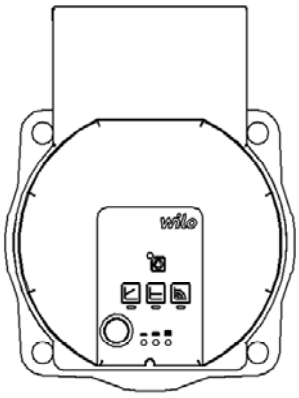

12.2 Symbols

Light-emitting diodes (LED)

- Warning indication:
  - The LED comes up green in normal operation.
  - The LED comes up/flashes in case of failure.

- Indication of the selected adjustment mode Δp-v, Δp-c and constant speed.

- Indication of the selected characteristic curve (I, II, III) in the adjustment mode.

- Indications of the LED combinations during the drain function, manual reset and keypad lock.

Operation button

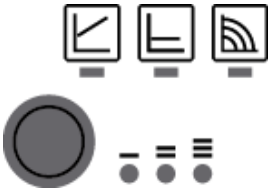

Press:

- Adjustment mode selection.
- Selection of the characteristic curve (I, II, III) in the adjustment mode.

Keep pressed:

- Activate drain function (press 3 seconds).
- Activate manual reset (press 5 seconds).
- Keypad lock/unlock (press 8 seconds).

12.3 Adjustment modes

1 – Constant speed I, II, III (traditional mode):

The pump operates at a constant, pre-set speed. This is the standard operating mode of the pump in the **Fusion Hybrid Oil** module at speed **II.**

2 – Variable differential pressure (Δp-v):

The setpoint value of the differential pressure H increases in a straight line between ½H and H within the permitted flow margin. The differential pressure generated by the pump is adjusted to the appropriate setpoint value of differential pressure.

3 – Constant differential pressure (Δp-c):

The adjustment keeps the discharge height adjusted independently of the flow rate.

4 – Setting the adjustment mode

	LED indicator	Adjustment mode	Characteristic curve
1		Constant speed	II
2		Constant speed	I
3		Variable differential pressure Δp-v	III
4		Variable differential pressure Δp-v	II
5		Variable differential pressure Δp-v	I
6		Constant differential pressure Δp-c	III
7		Constant differential pressure Δp-c	II
8		Constant differential pressure Δp-c	I
9		Constant speed	III

The ninth time the key is pressed, the factory setting is reached (constant speed/characteristic curve III).

Important **The standard operating mode of the circulation pump for the Fusion Hybrid Oil Module is with constant speed adjustment at speed II.**

12.4 Functions

Drainage

- Fill and drain the installation correctly.

If the pump is not drained automatically:

- Activate the drain function by means of the operating button, hold the button for 3 seconds and then release.
- The drain function starts and lasts 10 minutes.
- The upper and lower LED rows flash intermittently in 1 second intervals.
- To cancel, press the operating button for 3 seconds.

Nevertheless, this function does not drain the heating system.

Lock

- Activate the keypad lock by means of the operating button, hold the button 8 seconds until the LEDs of the selected setting flash briefly and then release.
- The LEDs flash permanently at intervals of 1 second.
- As soon as the keypad lock is activated, the pump settings cannot be changed again.
- The deactivation of the keypad lock is performed in the same way as the activation.

This offers protection against unwanted or unauthorised pump adjustment.

Factory setting activation

The factory setting is activated by holding down the operating button and disconnecting the pump at the same time.

- Press and hold the operating button for at least 4 seconds.
- All LEDs flash for 1 second.
- The LEDs of the last setting flash for 1 second.

When connected again, the pump will operate with the factory setting (delivery status).

Manual reset

- If a lock is recognised, the pump attempts to restart automatically.

If the pump does not restart automatically, proceed as follows:

- Activate the manual reset by means of the operating button, hold the button for 5 seconds and then release.
- The reset operation will start and will last a maximum of 10 minutes.
- The LEDs flash consecutively in a clockwise motion.
- To cancel the operation, press the operating button for 5 seconds.

Fusion Hybrid Oil

Characteristic curve of the circulation pump for the constant speed mode I, II, III:

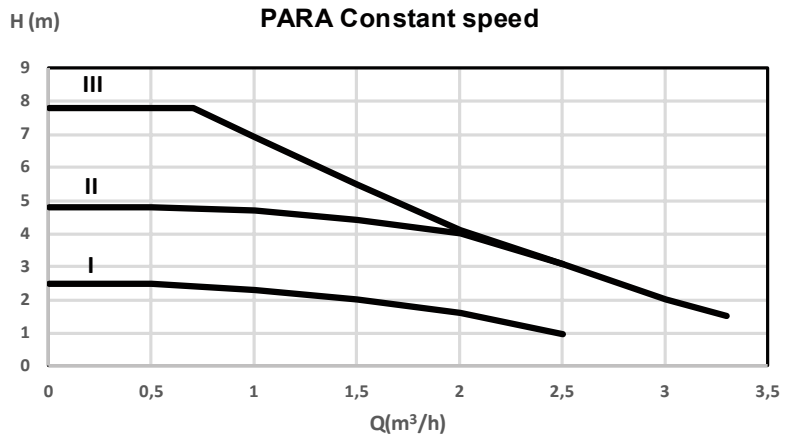

Characteristic curve of the circulation pump for the variable differential pressure mode:

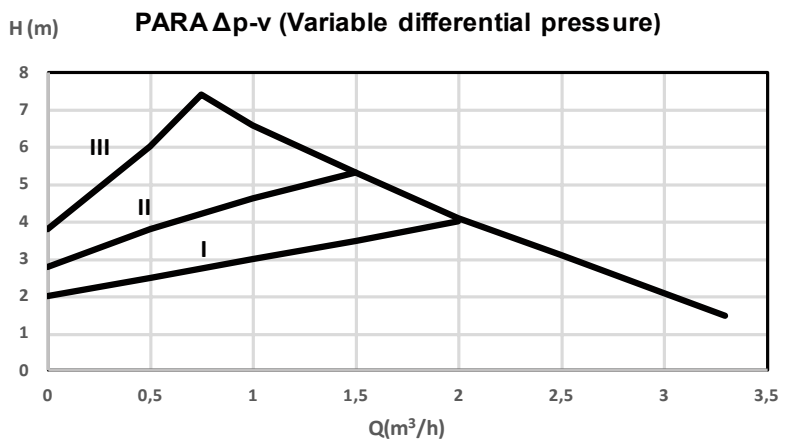

Characteristic curve of the circulating pump for the constant differential pressure mode:

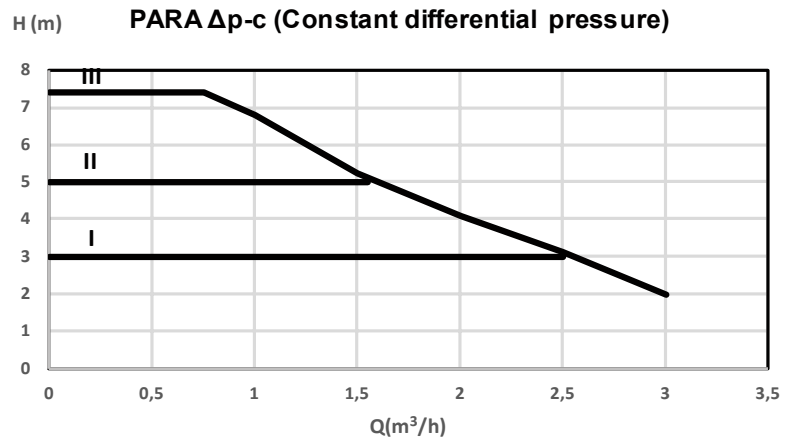

12.5 Load losses.

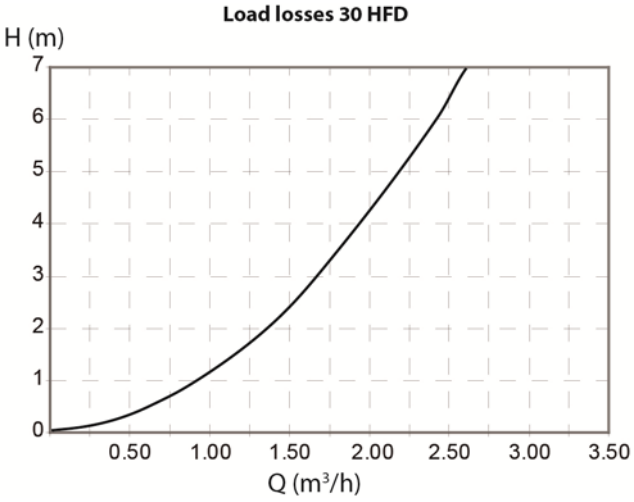

13 DIAGRAMS AND MEASUREMENTS

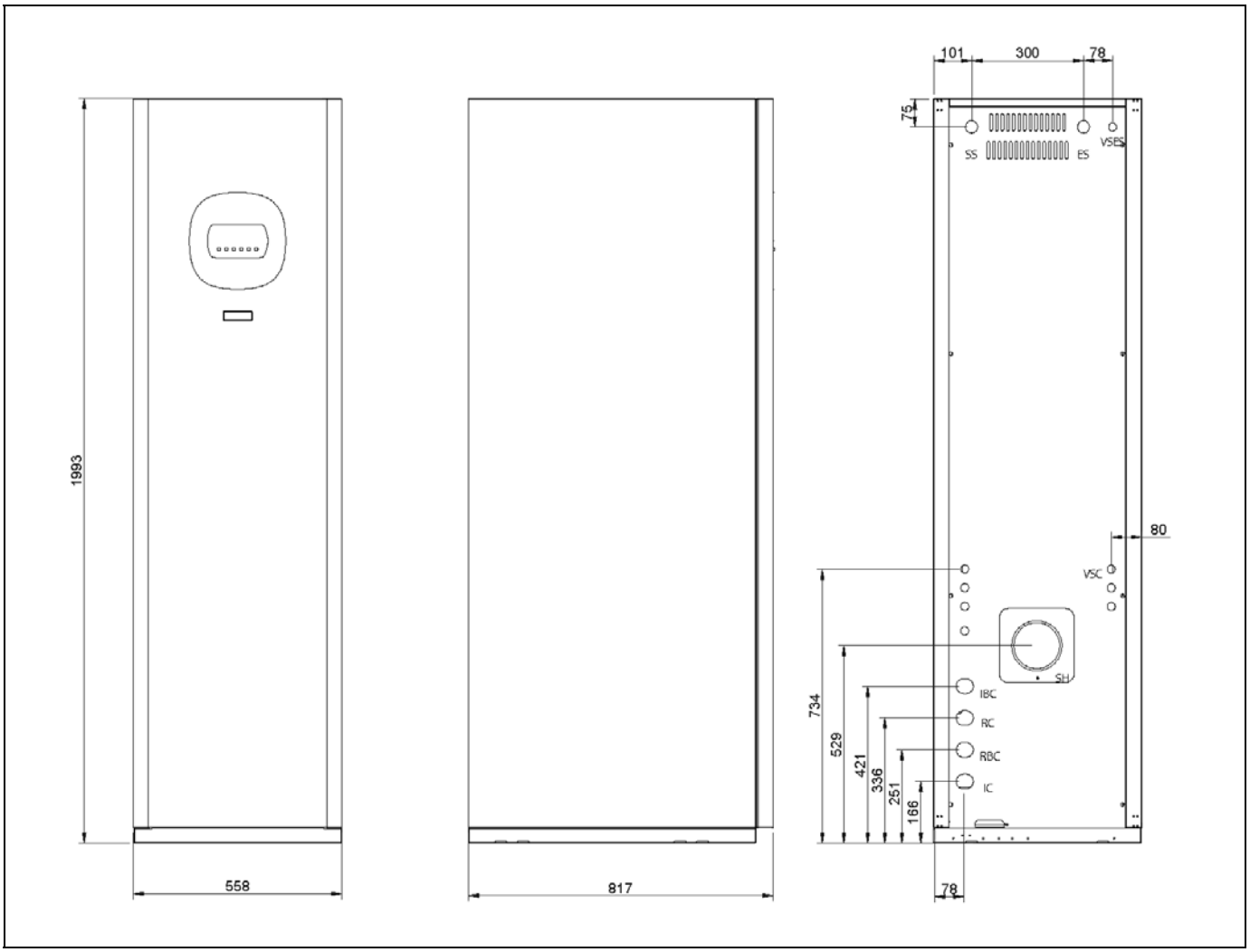

	Connection
IC: Heating/Cooling Flow, Ø22	1” M
RC: Heating/Cooling Return, Ø22.	1” M
IBC: Heat Pump Flow, Ø22	1” M
RBC: Heat Pump Return, Ø22	1” M
ES: Domestic cold water input.	3/4" M
SS: Domestic hot water outlet.	3/4" M
VSES: DHW safety valve	-
VSC: Heating safety valve.	-
SH: Fume outlet	Ø150

14 TECHNICAL CHARACTERISTICS

FUSION HYBRID OIL				
Boiler type		-		Low temperature (heating + DHW by storage)
Rated heat output		Prated	kW	29
Useful heat output		P_4	kW	28.1
Useful heat output (30%)		P_1	kW	8.9
Seasonal energy efficiency of heating		η_S	%	86
Useful efficiency		η_4	% (PCI)	91.5
			% (PCS)	86.3
Useful efficiency (30%)		η_1	% (PCI)	97.5
			% (PCS)	92.0
Auxiliary electricity consumption at full load		elmax	kW	0.161
Auxiliary electricity consumption at part load		elmin	kW	0.056
Auxiliary electricity consumption in standby mode		P_{SB}	kW	0.003
Heat loss in standby mode		P_{stby}	kW	0.106
Emissions of nitrogen oxides		NO_x	mg/kWh	85
Declared load profile		-		
Energy efficiency of water heating	100 L	η_{wh}	%	69
	130 L			69
Daily electricity consumption	100 L	Q_{elec}	kWh	0.353
	130 L			0.355
Daily fuel consumption	100 L	Q_{fuel}	kWh	36.710
	130 L			36.887
Hot water tank capacity		L		120
DHW production in 10 min. Δt=30ºC	100 L	L		258
	130 L	L		321
DHW production in 1 hour ΔT = 30°C	100 L	l/h		721
	130 L	l/h		846
Tank recovery time from 35°C to 60°C	100 L	Min.		6
	130 L	Min.		8
Heating temperature adjustment		ºC		60/80
DHW temperature adjustment		ºC		0-65
Maximum safety temperature		ºC		110
Maximum operating pressure of heating		bar		3
DHW maximum operating pressure		bar		7
Heating water volume		L		16.2

Fusion Hybrid Oil

FUSION HYBRID OIL		
Water pressure drop	mbar	100
Fume temperature	ºC	213
Volume on fume side	m^3	0.114
Maximum fume flow	kg/s	0.0132
Pressure drop of the fumes	mbar	0.17
Combustion chamber length	mm	300
Combustion chamber type	-	Wet, with three exhaust ducts
Type of burner adjustment	-	ON/OFF
Electrical supply	-	~220-230 V - 50 Hz - 200 W
Gross weight:	kg	203

15 ELECTRICAL DIAGRAM

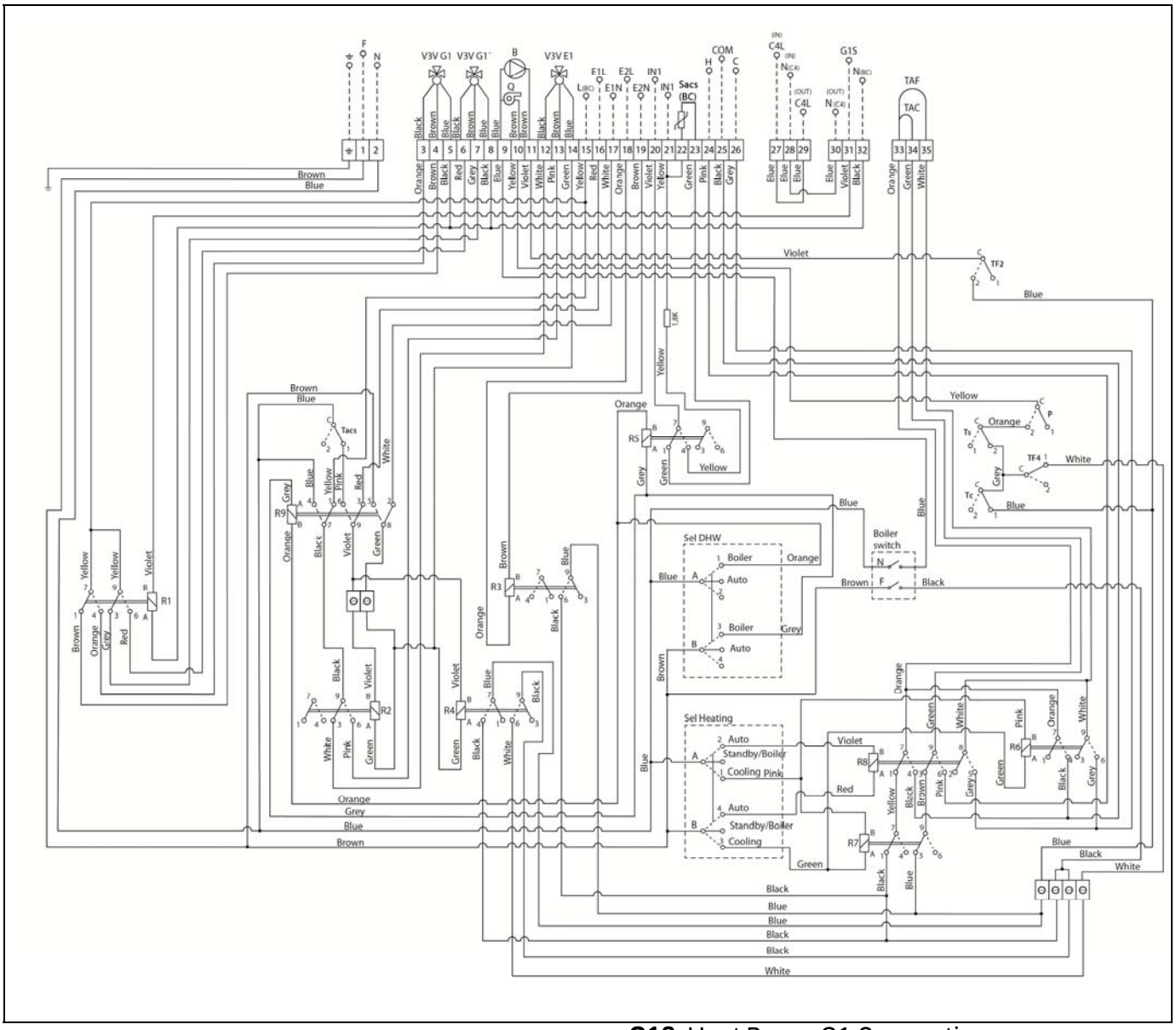

F: Live wire.

N: Neutral.

BC: Circulating pump.

TS: Safety thermostat.

TAF: Cooling Room Thermostat.

TAC: Heating Room Thermostat.

V3V G1: Heating/DHW 3-way valve.

V3V G1: Heating/DHW 3-way valve.

L: Heat Pump Live Wire

G1S: Heat Pump G1 Connection

N (BC): Heat Pump Neutral

V3V E1: Heating/DHW supporting 3-way valve.

E1L: DHW supporting connection.

E1N: DHW supporting connection.

E2L: Heating supporting connection.

E2N: Heating supporting connection.

IN1: Input signal from the DHW probe to the heat pump.

Sacs (BC): DHW temperature probe.

C: Input signal from the cooling room thermostat to the heat pump.

H: Input signal from the heating room thermostat to the heat pump.

COM: Input signal from the common room thermostats to the heat pump.

Tacs: DHW storage tank thermostat.

R: Relay.

Sel ACS: DHW selector.

Sel CAL: Heating selector.

C4L (IN): “C4L” input signal of the heat pump. Support pump signal.

C4L (OUT): Connection of the support pump.

N (C4) IN: “N” input signal of the heat pump. Support pump signal.

N (C4) OUT: Connection of the support bomb.

N (BC): Heat pump neutral.

16 BURNER

16.1 Assembly

Fit the intake and return tubes, inserting the oil filter in the intake tube.

16.2 Burner start-up

The “Domestic” burner is equipped with a self-extracting pump to enable fuel intake from a tank installed at a lower level than the burner, providing that the pressure difference measured with the vacuum gauge at the pump does not exceed 0.4 bar (30 cmHg).

Fuel aspiration should never reach the bottom of the tank, always leaving a minimum distance of 10 cm to the bottom. If possible, float suction kits are recommended.

In installations that allow it, fuel returns must be made to a recirculating filter with an air trap, thereby preventing oxidation in the diesel pump.

Make sure there is fuel in the tank, that the oil valves are open, and that voltage is reaching the burner. Turn on the master switch. Unscrew the air bleed screw (manometer point). Then, when the valve opens, remove the photocell sensor and move it towards a light source until the oil comes out. Disconnect the burner and screw the bleed screw back in.

16.3 Adjustment

Observe the flame. If there is insufficient combustion air, it will be dark in colour and will produce smoke, rapidly obstructing the flue outlet.

On the contrary, if there is an excess of combustion air, the flame will be whitish or bluish-white in colour. This will reduce the performance of the boiler and it will fail to comply with anti-pollution standards, and the excess air may also hinder the ignition process.

The flame should be orange in colour.

If the shape of the boiler makes it difficult or impossible to observe the flame, the combustion air flow can be regulated by observing the smoke coming out of the flue. If the smoke is dark in colour, more air will need to be provided to the burner, or if it is a very whitish colour, the air in the burner will need to be decreased until no smoke at all is observed.

If you have a device for determining the composition of the combustion gases, this will be the best guide for flame adjustment. If not, simply follow the above indications.

16.4 Primary air adjustment

To adjust the primary combustion air, turn the screw using a 6 mm. Allen key, as shown in the diagram. Turn it clockwise to increase the airflow, and anticlockwise to decrease it.

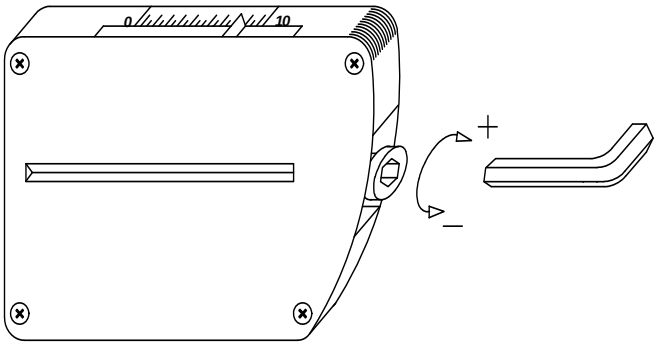

16.5 Combustion line adjustment

To adjust the combustion line, loosen the combustion line blocking screw **"BL"**. Turn the line regulator **"RL"** clockwise to increase the airflow and anticlockwise to decrease it. After adjustment, tighten the combustion line blocking screw **"BR"**.

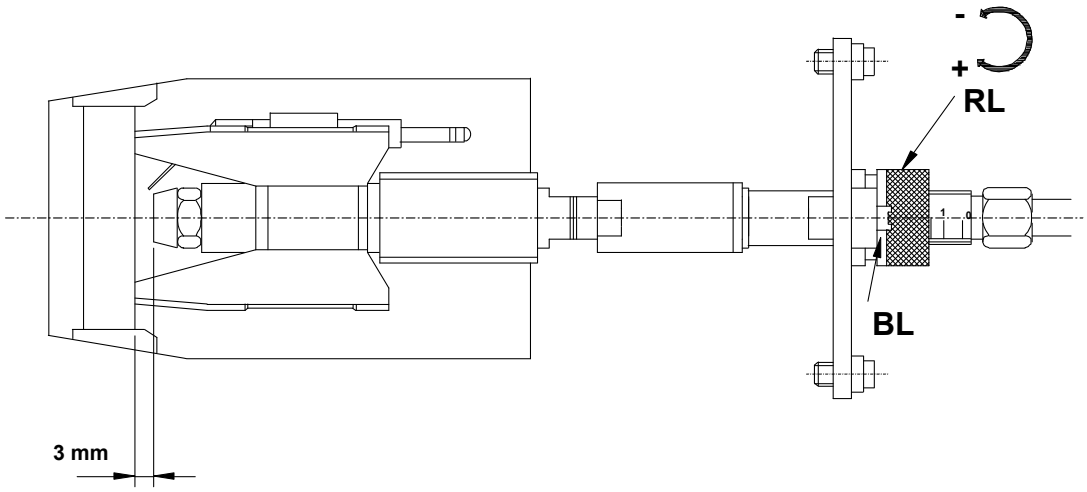

16.6 Correct position of electrodes

To ensure correct ignition of the **"Domestic"** burner, the measurements shown in the diagram must be observed. In addition, ensure that the electrode fixing screws have been screwed in place before replacing the flame tube.

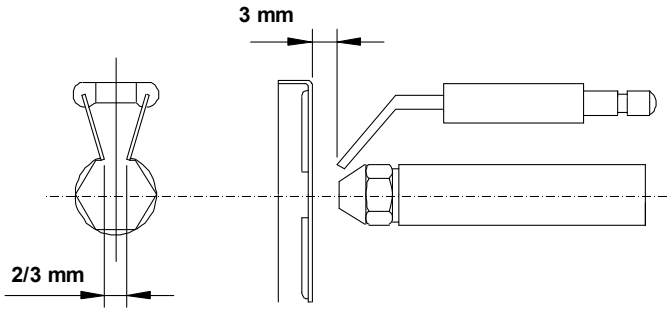

16.7 Oil pressure adjustment

To adjust the oil pump pressure, turn the screw *(1)* clockwise to increase the pressure, and anticlockwise to decrease it.

1 - Pressure adjustment.

2 - Vacuum gauge point.

3 - Valve.

4 - Manometer point.

5 - Nozzle outlet.

6 - Return.

7 - Intake.

SUNTEC - MOD. AS47C

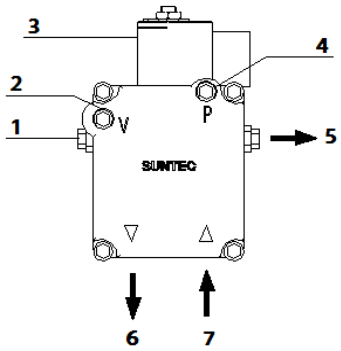

DANFOSS – MOD. BFP 21 L3

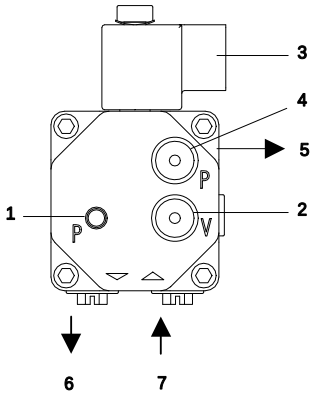

16.8 Technical specifications

Max. consumption	**kg/h**	2.4
Power.	**kW**	29
Motor power.	**W**	110 W
Adjustment type		On/Off
Electric voltage		220 V - 50 Hz

16.9 Recommended nozzle and pump pressure

The **Fusion Hybrid Oil** module is supplied with the burner mounted, with its corresponding nozzle and a standard pre-adjustment. The following table specifies the nozzle and corresponding adjustments:

MODEL	Nozzle	Burner pressure (bar)	Air adjustment	Line adjustment
30 HFD	0.55 60° H	13.5	3	2

16.10 Oil supply piping diagrams

The diagrams and tables below correspond to installations without reductions and with a perfect hydraulic seal. It is recommended to use copper pipes. A pressure drop of 0.4 bar (30 cmHg) must not be exceeded.

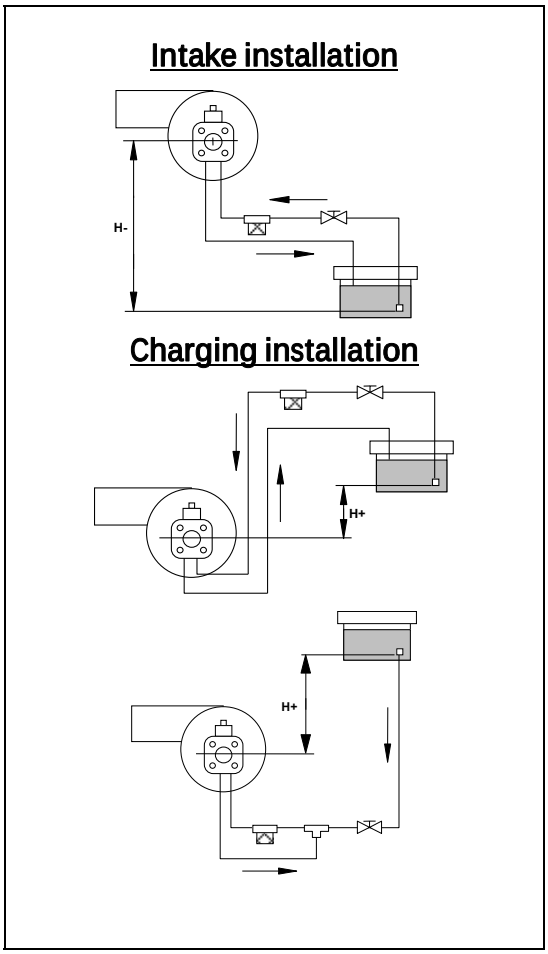

Intake installation		
H-	**Pipe length**	
(m)	∅int 8 mm.	∅int 10 mm.
0.0	34	82
0.5	30	72
1.0	25	62
1.5	21	52
2.0	17	42
2.5	13	32
3.0	9	21
3.5	6	16

Charging installation		
H+	**Pipe length**	
(m)	∅int 8 mm.	∅int 10 mm.
0.5	36	80
1.0	42	90
1.5	46	100
2.0	50	100

16.11 Electrical diagrams

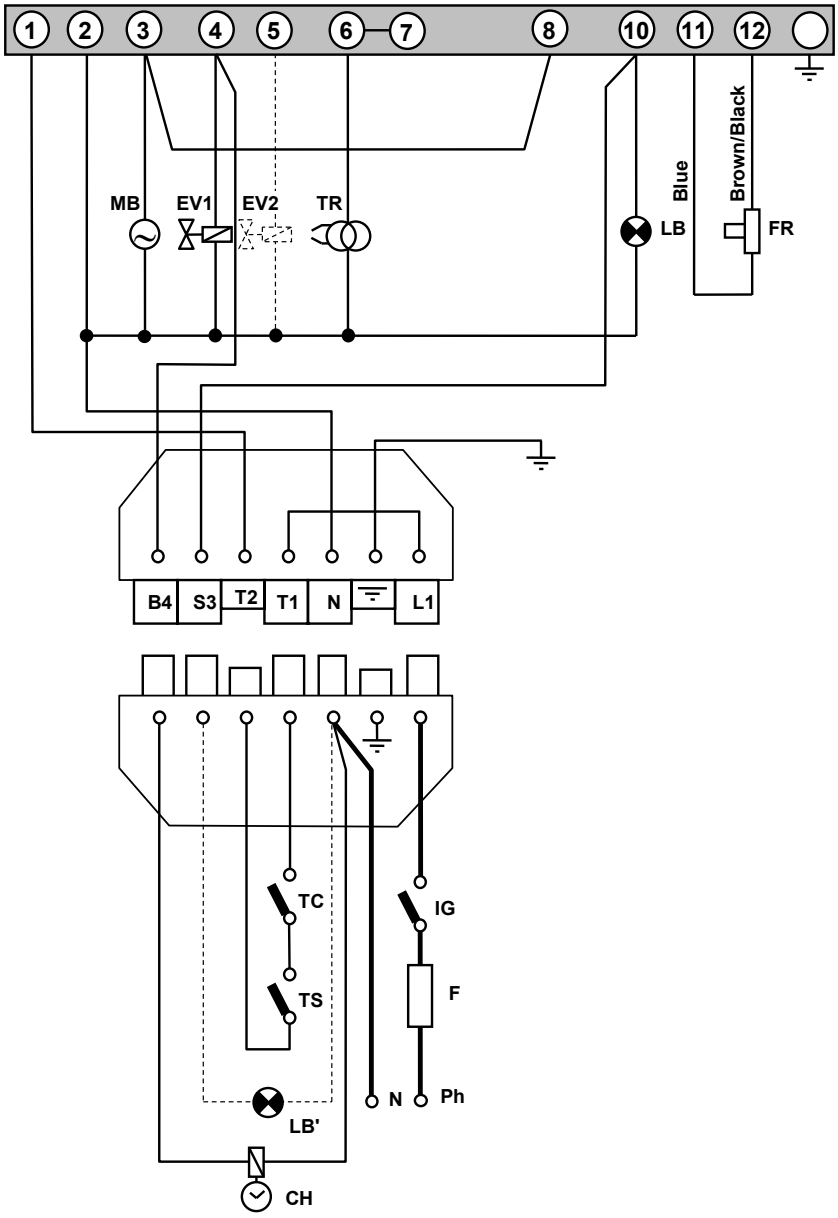

B4: Time meter contact.
S3: Cut-off light contact.
TC: Boiler thermostat.
TS: Safety thermostat.
CH: Time meter.
IG: General switch.
F: Fuse.
LB: Cut-off light.

LB: External cut-off light.
FR: Photocell.
TR: Transformer.
MB: Motor pump.
MB': Auxiliary motor pump.
EV: Solenoid valve.
Ph: Live wire.
N: Neutral.

16.12 Electrical diagrams

To connect and disconnect the red oil intake tube to the nozzle, proceed as follows:

Press the connector ring in the direction of the arrow, pulling on the red tube at the same time.

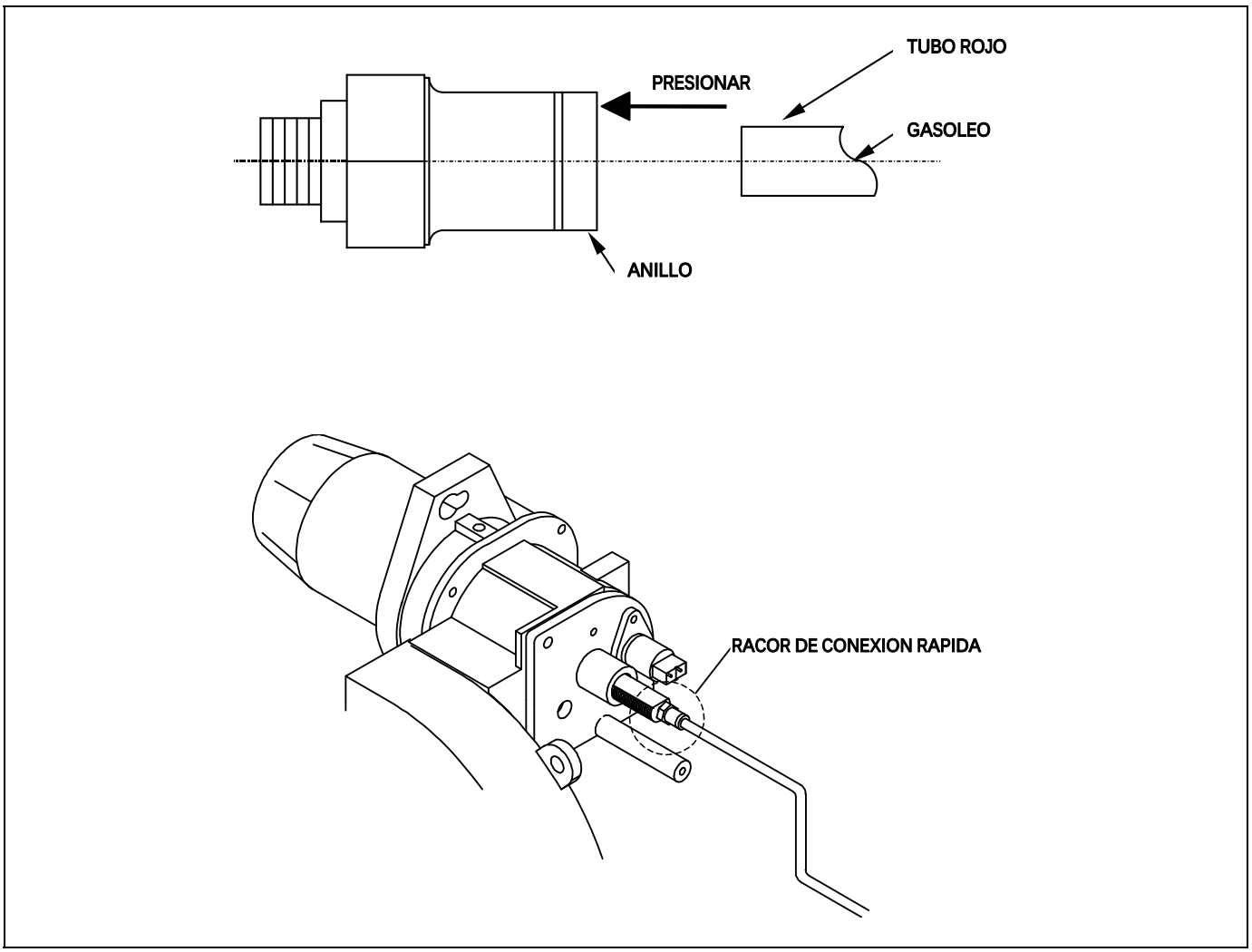

16.13 Burner operating sequence

The burner's LMO control box has a reset button which is the key element for resetting the burner control and activating/deactivating the diagnosis functions.

The multi-colour LED on the reset button is the indicator for visual diagnosis. The button and the LED are located under the transparent cover of the reset button. During normal functioning, the various operating statuses are indicated in the form of colour codes (see the colour code table below). During ignition, the indication is as shown in the following table:

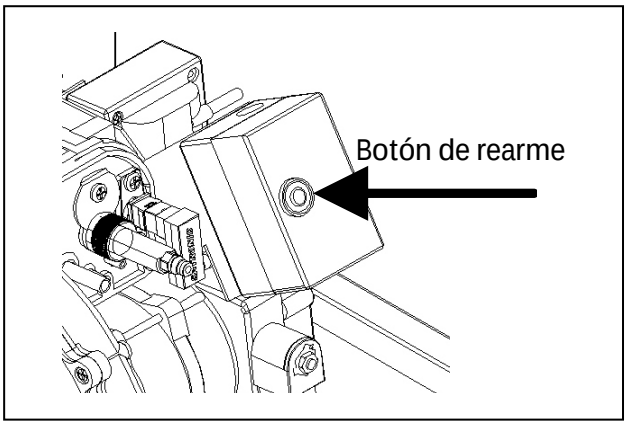

Tabla de código de color para indicadores luminosos multicolor (LED)		
Estado	Código de color	Color
Tiempo de espera "tw", otros estados de espera	○	Apagado
Precalentador de fuel encendido	●.....	Amarillo
Fase de encendido, ignición controlada	● ○ ● ○ ● ○ ● ○ ● ○	Amarillo intermitente
Funcionamiento, llama bien	□	Verde
Funcionamiento, llama mal	□ ○ □ ○ □ ○ □ ○ □ ○	Verde intermitente
Luz externa durante arranque de quemador	□ ▲ □ ▲ □ ▲ □ ▲ □ ▲	Verde-rojo
Subtensión	● ▲ ● ▲ ● ▲ ● ▲ ●	Amarillo-rojo
Fallo, alarma	▲	Rojo
Salida de código de error (consultar "tabla de código de error")	▲○ ▲○ ▲○ ▲○ ▲○	Rojo intermitente
Diagnostico de interfaz	▲ ▲ ▲ ▲ ▲ ▲ ▲ ▲	Luz roja parpadeante

..... Luz fija
○ Apagada
▲ Rojo
● Amarillo
□ Verde

16.14 Burner error code

We have already mentioned that the burner is equipped with a cut-out system, indicated by the reset button light. It may cut out accidentally, and in this case the steady red light on this button will come on. You may unblock it by pressing the button for approx. 1 second. When the burner is locked and the steady red light is on, visual failure diagnosis may be activated, in accordance with the error code table. To enter visual failure diagnosis mode, hold down the reset button for at least three seconds.

Error code table		
Red flashing LED code	"AL" on term. 10	Possible cause
Flashes 4 times	On	No flame established when the ignition safety time ends. - Fuel valves defective or dirty - Flame detector defective or dirty - Burner maladjustment, no fuel - Ignition unit defective
Flashes 4 times	On	External light during burner ignition
Flashes 7 times	On	Excessive flame loss during functioning (limited number of repetitions) - Fuel valves defective or dirty - Flame detector defective or dirty - Burner maladjustment
Flashes 8 times	On	Supervision of fuel pre-heater time
Flashes 10 times	On	Cabling fault or internal failure, output contacts, other failures

17 SPARES LIST

FUSION HYBRID OIL Tank

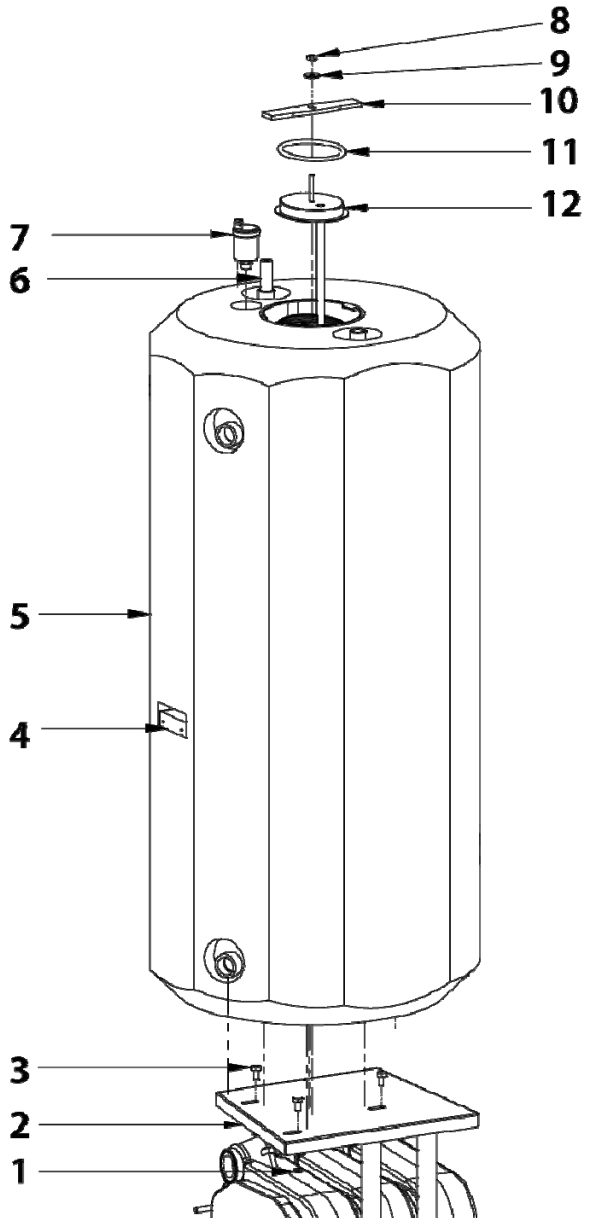

Pos.	Code	Designation
1	CTOT000076	Self-locking hex nut M8
2	SCHA000938	Base grill
3	CTOR000106	Screw Hex cable DIN-933 M8 X16
4	SCHA000941	Expansion vessel fixing
5	SCON002129	Hot water tank
6	SCOB013036	DHW pipe
7	SCON001275	Drain valve
8	CTOR000092	Hex nut Zinc-plated DIN934 M8
9	CTOR000080	Flat washer DIN-9021 M8
10	SEPO003143	Bridge cover
11	COTR000006	O-ring 108 X 7 EPDM
12	SCON002248	Elliptic cover

FUSION HYBRID OIL Boiler

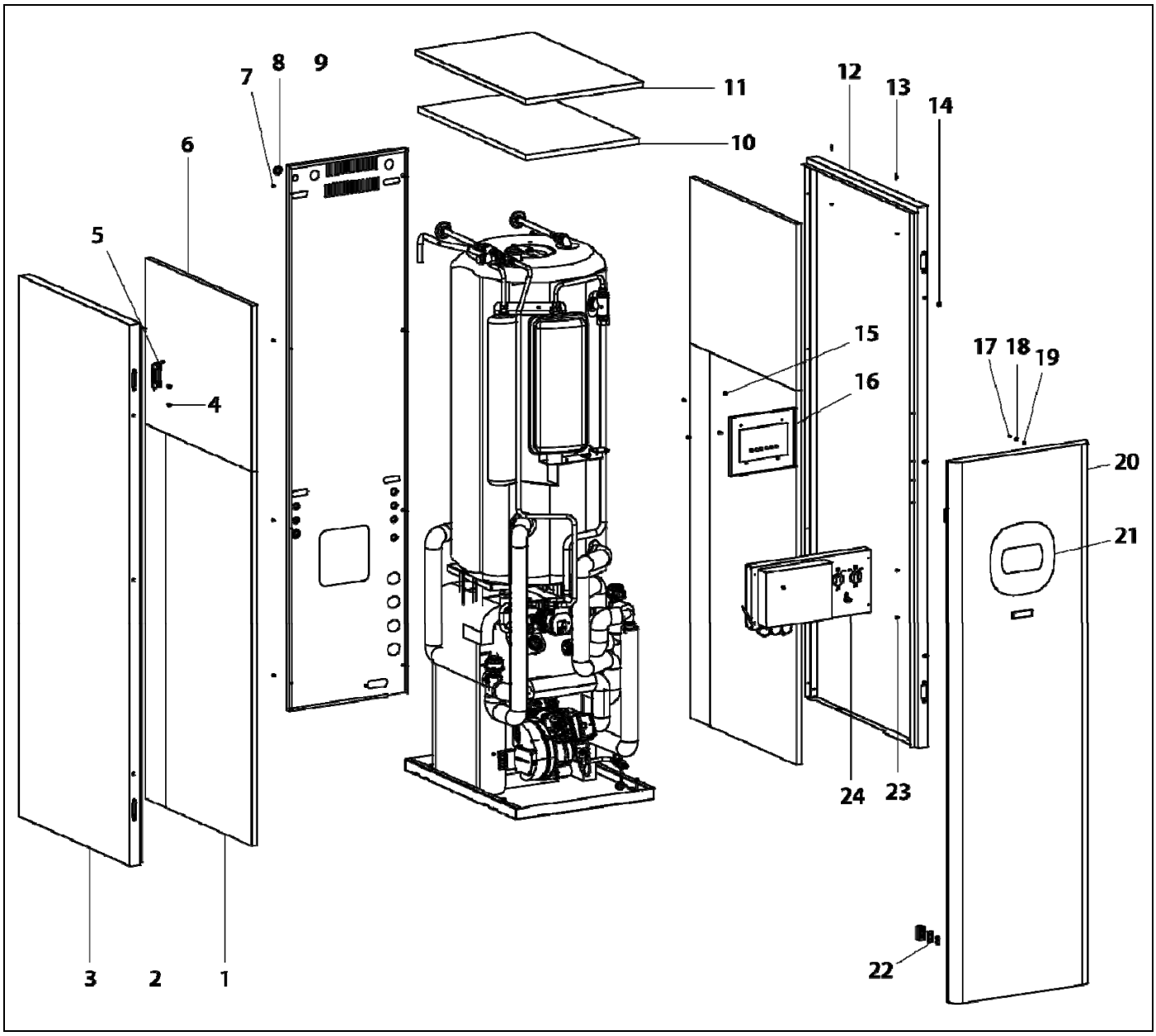

Pos.	Code	Designation
1	SAIS000422	Bottom side insulation
2	SAIS000424	Rear side insulation
3	SEXT000743	Left side panel
4	CTOR000253	Screw Head Allen flat screw DIN 7991
5	CRER000221	Concealed hinge 120°
6	SAIS000423	Top side insulation
7	CTOR000073	Self-tapping screw 3.9 X 9.5
8	CFER000062	Cable duct
9	SEXT000746	Rear
10	SAIS000425	Top cover insulation
11	SEXT000745	Top cover
12	SEXT000744	Right side panel
13	CTOE000355	Clip pivot
14	CFER000002	REAR INSULATION
15	CTOR000040	Round head screw M5 X 10

Pos.	Code	Designation
16	SELEDCL000	Electrical board
17	CTOR000316	Flat allen head screw DIN 7991 M3 X10
18	CFER000335	Magnet
19	CTOR000315	Hex nut with DIN-6923 washer M3
20	SEXT000742	Front panel
21	SEXT000646	Front trim
22	CFER000317	Mobile part hinge
23	CTOR000073	Self-tapping screw 3.9 X 9.5
24	SELEDCL003	Electrical box

FUSION HYBRID OIL Plumbing

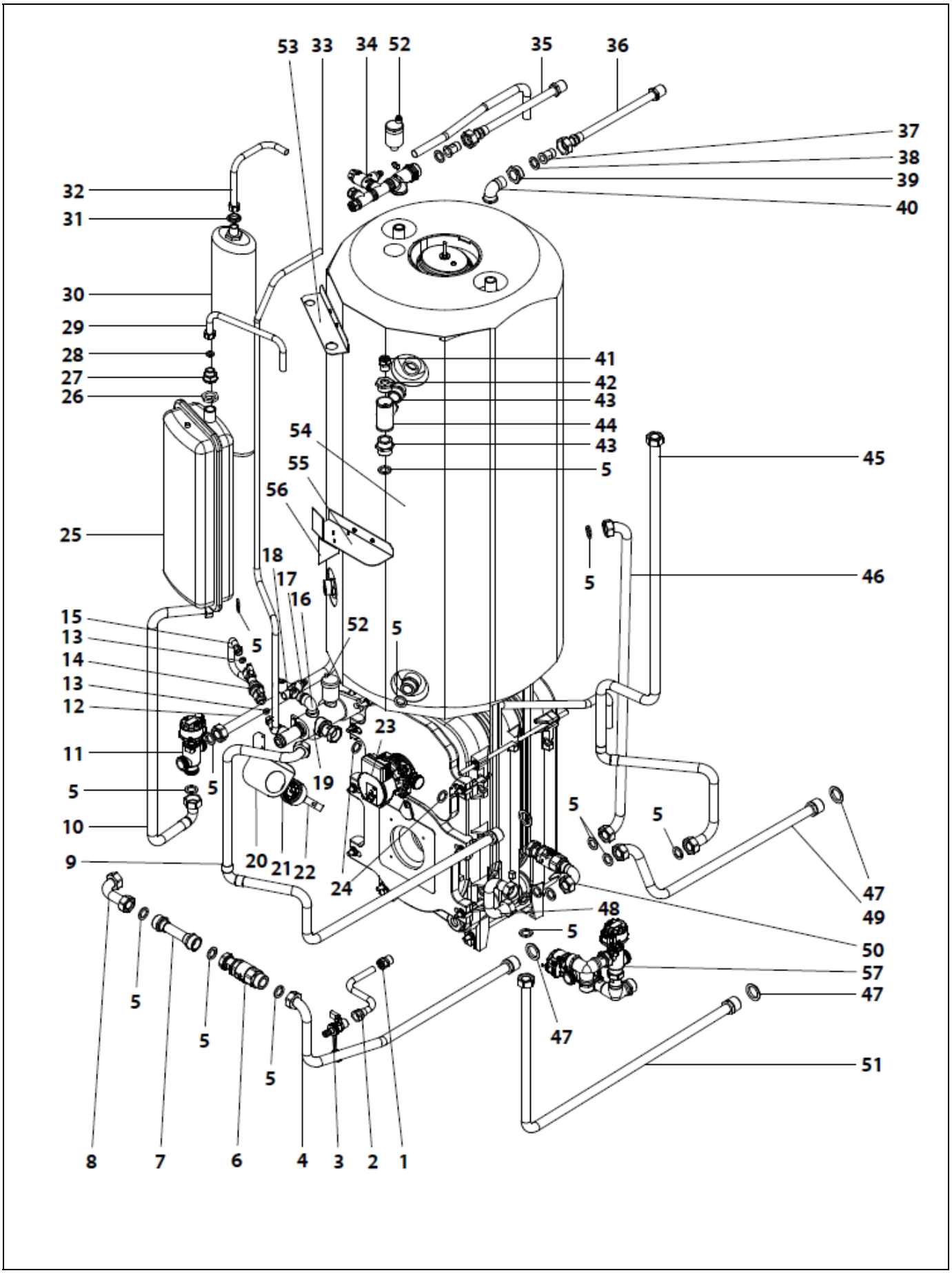

Fusion Hybrid Oil

Pos.	Code	Designation
1	CFOV000048	Telescopic fitting 3/4”
2	SCOB011706	Drainage tube
3	CVAL000034	Drain valve
4	SCOB013077	Heat pump outlet
5	CFOV000162	Belpa gasket 1”
6	SCON002342	Spool set
7	SCOB013097	Spool
8	SCOB013076	Pump valve
9	SCOB013066	Radiator return
10	SCOB013056	Top valve return
11	CVAL000068	3-way diverter valve
12	SCOB013075	Bottom valve return
13	CFOV000159	Transducer seal 3/8”
14	CVAL000023	Filling disconnector
15	SCOB013089	Boiler disconnector tube
16	CFOL000029	Barass elbow M-H 1/2
17	CFOL000005	Brass nipple 1/2
18	CVAL000004	Safety valve H-H 1/2
19	SCON002139	Manifold solution
20	SEPO003171	Thermohydrometer holder
21	CELC000084	Thermohydrometer
22	CFOV000143	Para pump 15/7 SC Wilo
23	SCOB013088	Primary expansion vessel tube
24	CFOV000161	EPDM 30X20X2 (1”) Negro
25	CFOV000032	Expansion Vessel 7,5 L
26	CFOG000029	Hex locknut 3/4”
27	CFOL000027	Marsella fitting 3”
28	CFOV000160	Belpa gasket 1/2”
29	SCOB013088	Primary expansion vessel tube
30	CFOV000068	Expansion vessel 4 L
31	CFOL000031	Sliding nut with flange 1/2”
32	SCOB013087	DHW expansion vessel tube
33	SCOB013090	DCW disconnector tube
34	SCON002330	DCW input set
35	SCOB013092	Domestic cold water input.
36	SCOB013093	Domestic hot water outlet
37	CTOE000071	½ Nipple with flange
38	CFER000219	Wras silicone gasket
39	CTOE000072	Red. ring with flange
40	CFOL000035	Brass elbow M-H 3/4”
41	CFOV000048	Telescopic fitting 1/2”
42	CFOL000104	Red. ring with hex flange 1” x 1/2”
43	CFOL000007	Brass nipple 1”
44	CFOL000034	Brass TE 1”
45	SCOB013070	Tank flow
46	SCOB013061	Boiler tank return
47	CFOL000074	Sliding nut with flange 1”
48	SCOB013081	G1 to 3-way elbow
49	SCOB013080	Heat pump input
50	SCON002340	Boiler flow set
51	SCOB013079	Radiator flow
52	SCON001275	Automatic air vent
53	SEPO003173	Expansion vessel holder
54	SEPO003172	Tank cover
55	SEPO003175	Expansion vessel holder
56	SEPO003176	DHW Expansion vessel holder
57	SCON003241	Valve assembly

Burner

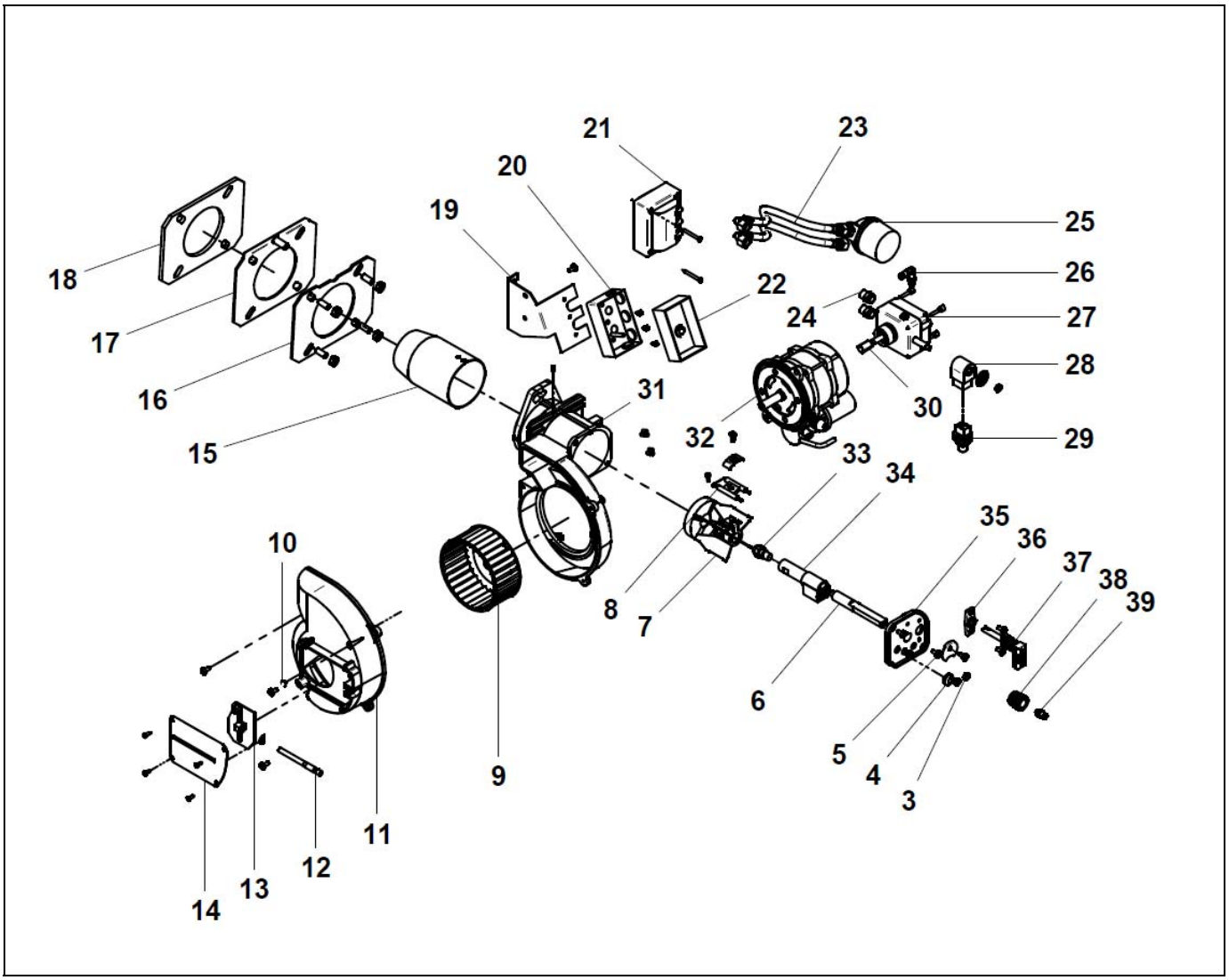

Pos.	Code	Designation
3	CFER000074	Cable duct
4	CFER000190	Drum cover
5	SCHA002156	Line fixing
6	CTOE000063	Burner line
7	SOPE000220	Turbulator disc
8	CQUE000019	Set of electrodes
9	CQUE000045	Burner fan D3
10	CQUE000120	Clip D4
11	CQUE000095	Air adjustment support
12	CTOE000064	Air adjustment screw
13	CQUE000151	Air regulating plate
14	SEPO001237	Air adjustment cover
15	CQUE000015	Burner tube (30)
16	CQUE000158	Supporting gasket
17	SOPE000085	Flange
18	CQUE000033	Burner gasket
19	CQUE000165	Control box fastener
20	CQUE000129	Control box base
21	CQUE000024	Transformer
22	CQUE000169	Control box
23	CQUE000119	Oil hose

Pos.	Code	Designation
24	CTOE000065	Counter thread M-M 1/4”
25	CQUE000055	Oil filter
26	CTOR000007	Elbow connector 4 x 2.7 g1/8”
27	CQUE000011	Suntec oil pump
	CQUE000088	Danfoss oil pump
28	CQUE000056	Suntec valve coil
	CQUE000089	Danfoss valve coil
29	CQUE000054	Suntec valve coil cable
	CQUE000124	Danfoss valve coil cable
30	CQUE000004	Pump motor coupling
31	CQUE000094	Motor support
32	CQUE000037	Motor
33	CQUE000080	Nozzle OD-H 0.55 – 60°
34	CTOE000055	Line shim
35	CQUE000096	Line cover
36	CQUE000224	Photocell support
37	CQUE000220	Photocell
38	CTOE000054	Line adjustment nut
39	CTOR000006	Straight fitting 4 x 2.7 M5

Fusion Hybrid Oil

FUSION HYBRID OIL Electrical board

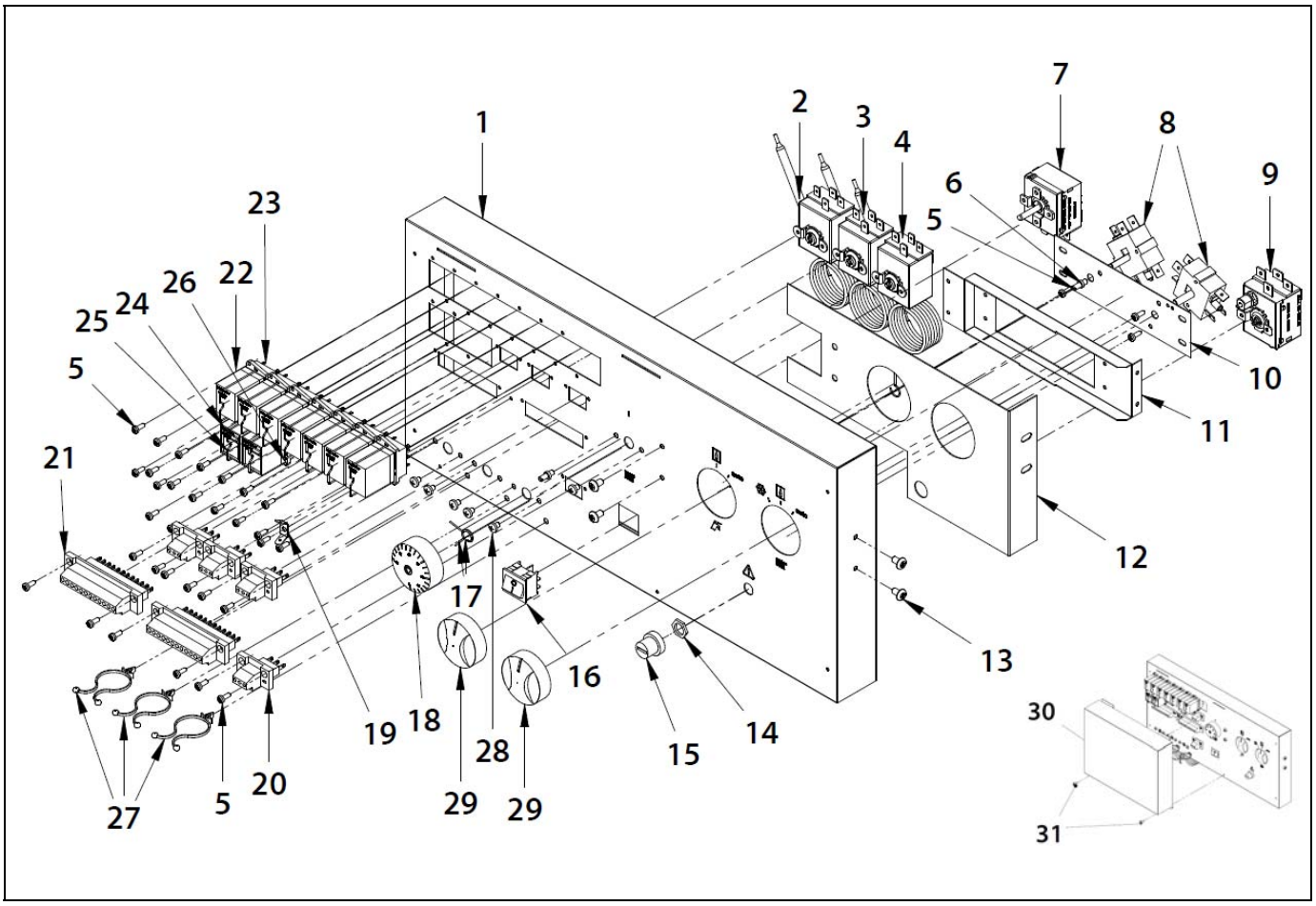

Pos.	Code	Designation
1	SEPO003191	Drawer
2	CELC000215	Fixed setpoint thermostat 70°
3	CELC000466	Fixed setpoint thermostat 52°
4	CELC000547	Fixed setpoint thermostat 60°
5	CTOR000091	Screw DIN 7981 3,2X9,5
6	CELC000020	Knob screw
7	CELC000007	Control thermostat
8	CELC000041	Rotary commutator
9	CELC000022	Safety thermostat 110°C
10	SCHA014160	Knob fixing
11	SCHA013952	Knob fixing
12	SEPO003193	Front rear plate
13	CTOR000072	Screw pan head 4.2 X 9.5
14	CELC000022	Term. washer Safety
15	CELC000022	Term. cover Safety
16	CELC000153	Black bipolar switch

Pos.	Code	Designation
17	CELC000021	Knob clamp
18	CELC000005	Knob 90º
19	CELC000429	Flat band
20	CELC000036	Weidmuller 3-pole terminal strip
21	CELC000042	Weidmuller 12-pole terminal strip
22	CELC000006	Relay
23	CELC000502	Relay socket
24	CELC000042	Three-phase relay
25	CELC000323	Spring for three-phase relay
26	SELC000016	Socket for three-phase relay
27	CFER000126	Bracket
28	CTOR000193	Screw PH M4 X 5
29	CELC000099	Black knob
30	SEPO003192	Electrical board cover
31	CTOR000073	Screw pan head 3,9 x 9,5
32	CMAZ000148	Fusion Hybrid Oil harness

NOTES:

NOTES:

NOTES:

DOMUSA

T E K N I K

POSTAL ADDRESS
Apartado 95
20730 AZPEITIA
Tel: +34 943 813 899

FACTORY & OFFICES
Bº San Esteban s/n
20737 RÉGIL (Gipuzkoa)

www.domusateknik.com

DOMUSA TEKNIK reserves the right to introduce, without prior notice, any change in the characteristics of its products.

CDOC002062 27/07/20